LED Light System w/Control Box (18 LEDS)

Used with 1/10 short course truck

NO.48103

⚠ **Not all the Radio Controller System compatible with this LED control box.**
Due to limited wire length of the LED lights set, please pre-check proper fixure location before using 3M double-sided tape to fix it.
We suggest to fix the LED lights set at the nearest area to the signal receiver which on the bottom of the chassis.

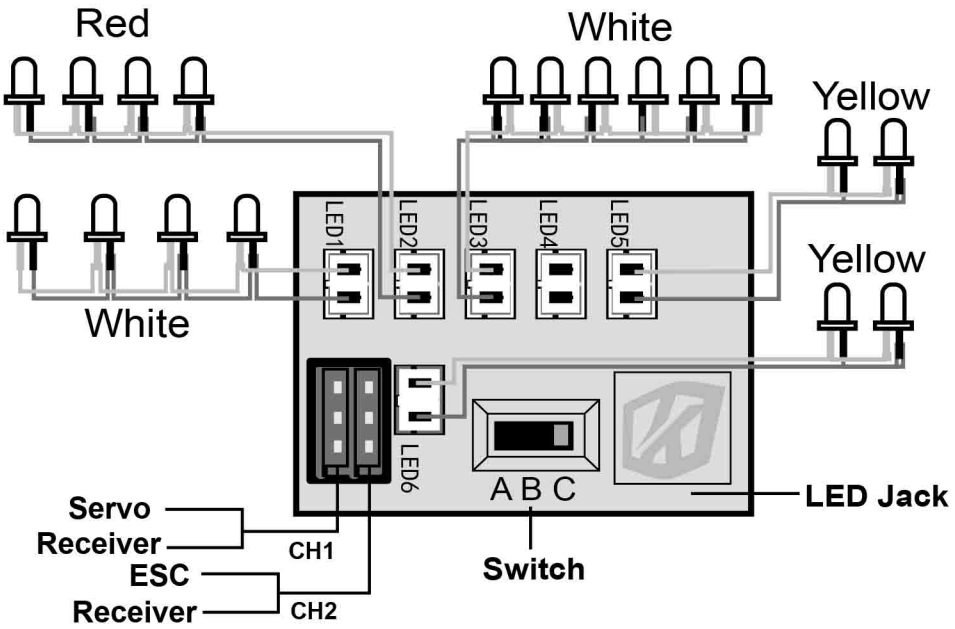

Port C
Function:

1) All lights will flash when power connected.
2) LED 1(forward light, 4 white lights) will light up when received forward signal.
3) LED 2 (backward light, 4 red lights) will light up dimly when received signal, and will light up when received backward signal.
4) LED 5(left-turn lights, 2 yellow lights) will flash when received left turn signal.
5) LED 6(right-turn lights, 2 yellow lights) will flash when received right turn signal.
6) LED 3 (roof light, 6 white lights) will light up when power connected.

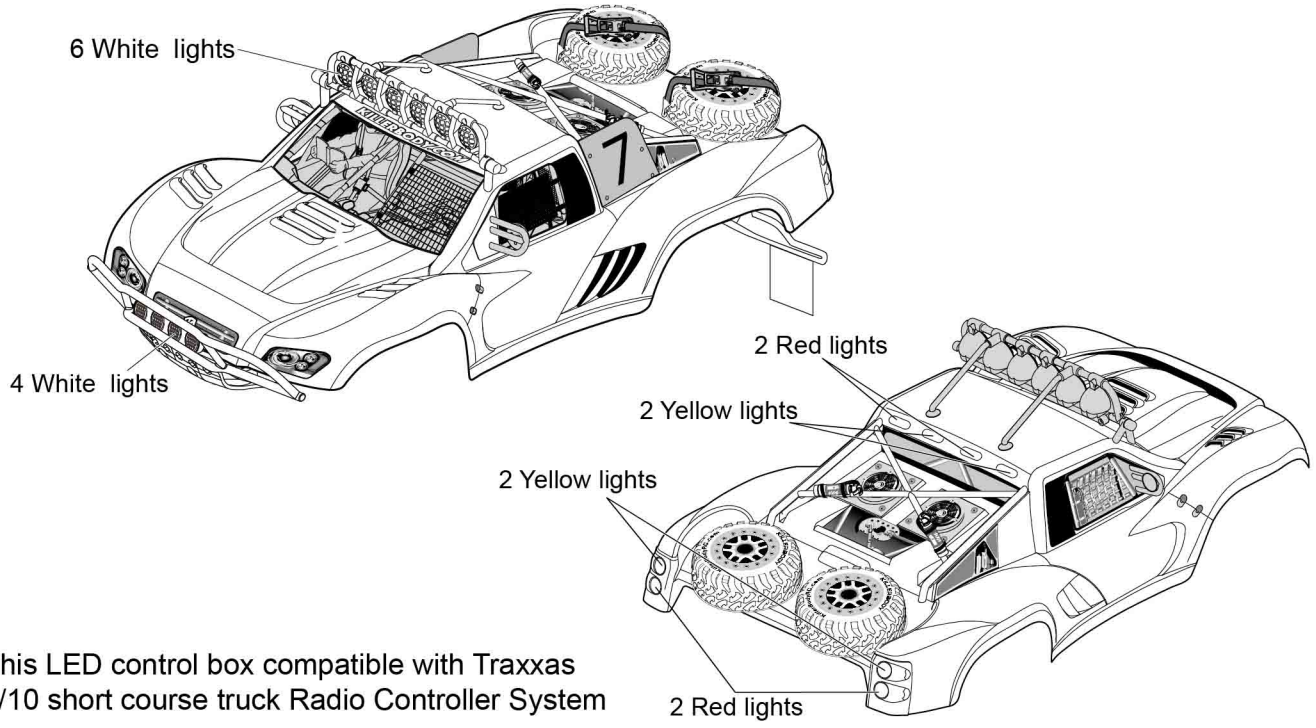

This LED control box compatible with Traxxas 1/10 short course truck Radio Controller System