## 自卸车概览 OVERVIEW OF THE TRUCK

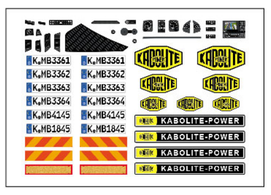

**车身贴纸位置参照以上图片**
**Refer to the picture above for the position of the sticker**



## 车斗操作 BUCKET OPERATION

**严禁将手指放在活动部件和齿轮上以免造成伤害；**
当心夹手

## 车斗参数 BODY PARAMETERS

车斗上升最大角度47°
The maximum body lift angle is 47°

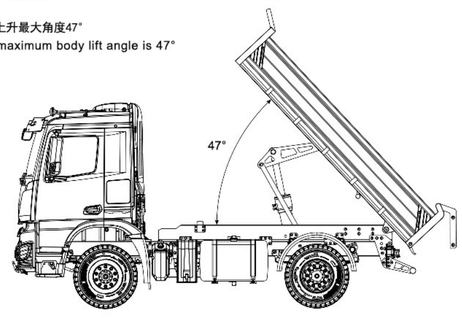




# ⚠ 警 告 WARNING

- 遥控器使用4节1.5V "AA" 非充电电池，遥控车使用7.4V 5000mAh 锂电池，首次充电需充满。
  Four 1.5V "AA" non-slave rechargeable batteries are used for remote control unit and 7.4V 5000mAh lithium batteries are used for radio-controlled car. Lithium batteries need to be fully charged before they are used for the first time.
- 非充电电池不能充电；
  Non-rechargeable batteries cannot be charged;
- 用尽的电池应从模型中取出；
  Depleted batteries should be removed from the model;
- 请勿将手指放在活动部件和齿轮上；
  Keep your fingers away from moving parts and gears;
- 遥控模型电机会发热，为了防止烫伤，请不要触碰；
  The motor of remote control model will be heating. In order to prevent scald, please do not touch it;
- 模型只能使用推荐的充电器，充电器不是模型；
  Only the recommended charger is allowed to be used for the model, and the charger is not a model;
- 为保证航空无线电台（站）电磁环境的要求，禁止在以机场跑道中心点为圆心，半径5000米内区域内使用各类模型遥控器，在国家有关部门发布无线电管制命令的期间，区域内应按要求停止使用模型遥控器。
  In order to meet the requirements for electromagnetic environment in the aviation radio stations, it is forbidden to use various remote control models within a radius of 5000 meters centered on the central point of the airport runway. During the period when the relevant national authority issues any radio control order, the use of the remote control model shall be stopped as required within the said area.
- "激光辐射，勿直视光束"
  "Do not look directly into the beam due to laser radiation."

## 重要通知 IMPORTANT NOTICE

⚠ 注意：本产品根据严格的性能准则，符合安全标准与要求进行生产。本产品不适合14岁以下的儿童使用。对于异常零件的使用，过度摩擦，不恰当的组装或者操作引起的受伤或者事故，生产者不承担任何责任。请安全负责地操作本产品。

⚠ Note: This product is produced in accordance with strict performance guidelines and meets safety standards and requirements. This product is not suitable for children aged 14 and below. The manufacturer will not be responsible for injuries or accidents caused by the use of abnormal parts, excessive friction, improper assembly or operation. Please operate this product safely and responsibly.

产品合格证
产品名称：工程车
产品型号：K3362
适应年龄：14岁以上
执行标准：GB/T 26701-2011
生 产 厂：汕头市卡勃力特模型有限公司
生产地址：汕头市澄海区信宁信兴五路9号
维护保养：本品含电子元件，不得入水或在潮湿环境下使用，用干抹布擦拭表面污迹。

**警告：该说明书含有重要信息，必须给予保留。**
说明书中的产品图案可能与实物有所差异，请以实物为准！

# K3362 1比14全比例4X4液压自卸车
1:14 SCALE 4X4 HYDRAULIC DUMP TRUCK
OPERATING INSTRUCTIONS 使用说明书

KABOLiTE 卡勃力特



## 遥控器注意事项 PRECAUTIONS FOR REMOTE CONTROL UNIT

开始操作前请务必阅读以下安全信息！
Please read the following safety information before operation!

- 请不要在夜晚或雷雨天气使用本产品，恶劣的天气环境有可能导致遥控设备失灵。
  Please do not use this product at night or in thunderstorm weather since bad weather may cause the remote control device to malfunction.
- 请不要在能见度有限的情况下使用本产品。
  Please do not use this product in any environment with limited visibility.
- 请不要在雨雪或有水的地方使用本产品。如果有液体进入到系统内部，可能会导致运行不稳定或设备失灵。
  Please do not use this product in rain, snow or water. If any liquid enters the system, it may cause unstable operation or failure of the device.
- 信号干扰可能导致设备失控。为保证您和他人的安全，请不要以下地点使用本产品：
  Signal interference may cause the device out of control. To keep you and others safe, please do not use this product in the following locations:

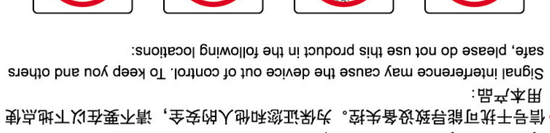


- 当你感到疲倦、不舒服，或在摄入酒精或服食导致麻醉或兴奋的药物后，不要操作本产品，否则可能对自己或他人造成严重的伤害。
  Please do not operate this product when you feel tired or uncomfortable, or after ingesting alcohol or taking any drug that cause anesthesia or excitement. Otherwise, you or others may be injured seriously.
- 2.4GHz无线电波段完全不同于之前所使用的低频无线电波段。使用时请确保模型产品在您的视线范围内行驶，大的障碍物将会阻断无线电频率信号从而导致遥控失灵模型失控。
  2.4 GHz radio frequency band is completely different from the low-frequency radio band used previously. During use of this product, please make sure that the model is driven within your line of sight. Large obstacles will block the radio frequency signal and thereby cause the remote control to fail and the model out of control.

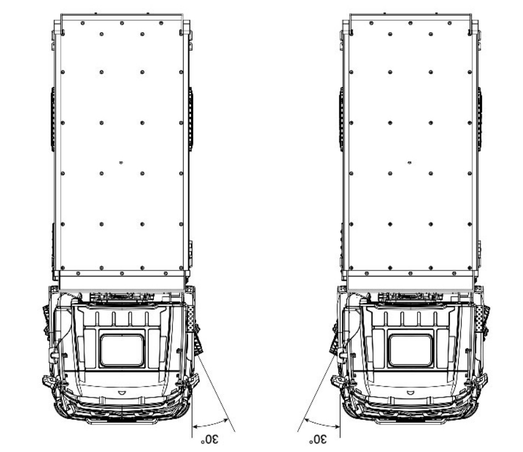


## 转向参数 STEERING PARAMETERS

前轮转向最大角度30°
The maximum angle of front wheel steering is 30°



## 需自行安装易损零部件 NEED TO INSTALL WEARING PARTS BY YOURSELF

安装此部分零件时需自行准备好胶水、美工刀等辅助工具
When installing this part, you need to prepare auxiliary tools such as glue, utility knife, etc.

## 尺寸参数 DIMENSIONS

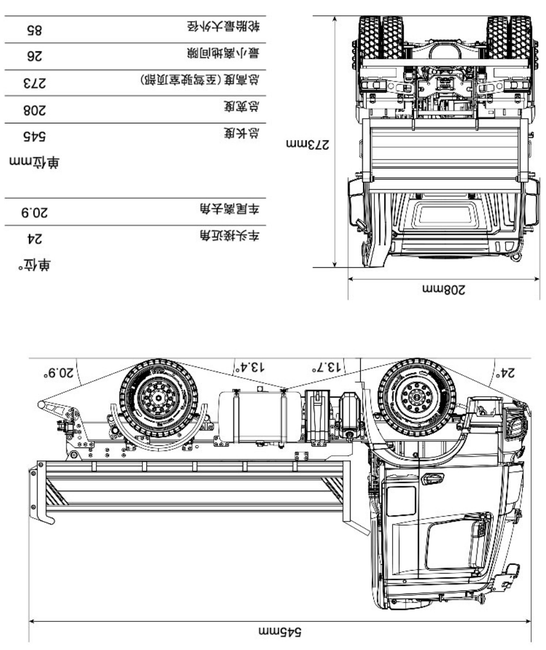





| | 单位° |
|---|---|
| 车头接近角 | 24 |
| 车尾离去角 | 20.9 |

| | 单位mm |
|---|---|
| 总长度 | 545 |
| 总宽度 | 208 |
| 总高度(至驾驶室顶部) | 273 |
| 最小离地间隙 | 26 |
| 轮胎最大外径 | 85 |

| 车斗容量 | 最大行驶速度 | 整机质量 | 最大载重 |
|---|---|---|---|
| 2056立方厘米 | 53 m/min | 7.3KG | ≤20KG |



## 遥控器概览 OVERVIEW OF REMOTE CONTROL UNIT

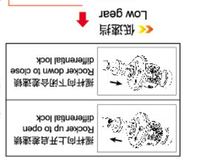


- VRA声音量调节旋钮 VRA sound module volume adjustment knob
- 喇叭 Whistle
- 停止 Stop
- 启动 Start up
- 关 OFF
- 灯光循环 Light cycle
- 开机键 Power switch
- 开 ON
- 低速挡 Low gear
- 高速挡 High gear
- 翻斗向下闭合最佳锁 Rocker down to close differential lock
- 翻斗向上开启最佳锁 Rocker up to open differential lock
- 油门 Accelerator
- 倒退挡 Reverse gear
- 前进挡 Forward gear
- 停止/刹车 Stop/Brake
- 显示屏 Display
- 下降斗 Descending hopper
- 左转 Turn left
- 右转 Turn right
- 上升斗 Rising hopper

| | | |
|---|---|---|
| 刹 车 Brake | ◉ ◉ | 下拉摇杆，回中摇杆。<br>Pull down the joystick and return to the center of the joystick. |
| 停 止 Stop | ◉ | 下拉摇杆到最低点。<br>Pull down the joystick to the lowest point. |
| 前进挡 Forward gear | ◉ ◉ ◉ ◉ | 剪车，回中摇杆，向右推动摇杆，切换到前进挡，回中摇杆。<br>Brake, return to the center of the rocker, push the rocker to the right, and switch to forward gear. |
| 倒退挡 Reverse gear | ◉ ◉ ◉ ◉ | 剪车，回中摇杆，向左推动摇杆，切换到倒退挡，回中摇杆。<br>Brake, return to the center of the joystick, push the joystick to the left, and switch to reverse gear. |



## 关于本产品的不恰当使用 ABOUT INAPPROPRIATE USE OF THIS PRODUCT

请不要对本产品进行任何形式的拆分，改造或变更。
Please do not disassemble, modify or change this product in any form.
请不要对本产品进行不恰当的或者违法的使用方法，也不要进行可能使他人或者自身处于危险中的操作。
Please do not use this product improperly or illegally, or operate this product in any way that may put others or yourself in danger.



## 电池充电 BATTERY CHARGING

**充电方法：**
**Charging method:**

1. 将电源连接线插到B3充电器电源插口。
   Plug the power cord into the power outlet of B3 charger.
2. 将锂电池的JP插头与B3充电器插座连接，并确保端口连接紧密和正确。
   Connect the JP plug of the lithium battery to the B3 charger socket, and make sure the port connection is tight and correct.
3. 接入电源，即可充电。
   Connect the power source for charging

**电池/USB参数**
**Battery / USB parameters**

| | |
|---|---|
| 电池规格Battery specification: 18650锂电池lithium battery: 7.4V 5000mAh | B3充电器charger 输入Input: 100-240V AC 50/60HZ 输出Output: 1.6A |

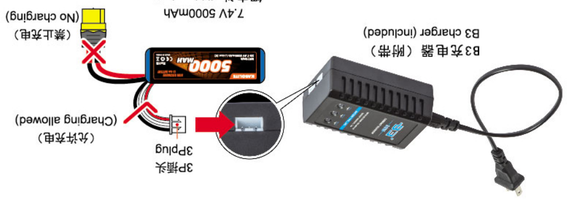


## 充电时指示灯状况：
## State of indicator light during charging:

充电时间：大约4-5小时，当充电完成，请及时拔掉B3充电器。
Charging time: about 4-5 hours. Please unplug the B3 charger in time as soon as the charging is completed.



## 充电器注意事项 PRECAUTIONS FOR CHARGER

The charger, its wire, plug, shell and other parts should be checked regularly to see whether any of them is damaged. If any of them is found to have been damaged, the use of the charger should be stopped until the damaged part is repaired completely.

## 锂电池注意事项 PRECAUTIONS FOR LITHIUM BATTERY

1. 电池请务必使用专用B3充电器进行充电。
   The battery must be charged with a dedicated B3 charger.
2. 锂电池在首次使用前，需将锂电池充满电。
   Lithium batteries need to be fully charged before they are used for the first time.
3. 因为外观受损的锂电池有发生自燃的可能性，请不要进行充电。
   Please do not charge any damaged lithium battery because it may ignite spontaneously.
4. 电池请务必按照指定的方法进行充电。
   The battery must be charged with the specified method.

## 锂电池安全使用方法 HOW TO USE LITHIUM BATTERY SAFELY

- 锂电池如果不正确使用的话，可能发生自燃危险。
  If the lithium battery is used improperly, there is a risk of spontaneous combustion.
- 因为不正确的使用锂电池引起的所有的损失，我司不承担任何责任。
  Our company will not be responsible for any loss arising from improper use of lithium batteries.
- 因为很有可能引发爆炸或者火灾，严禁使用厂附带的充电器以外的充电器对锂电池进行充电。严禁对电池进行拆解，撞击，烧烙，正负极反接等。避免金属物体与电池的正负极接触。严禁用尖锐物体刺穿电池，以免电池起火危险。
  It is strictly forbidden to use any charger other than those delivered by the original factory to charge the lithium battery. Otherwise, it is likely to cause an explosion or fire. It is strictly forbidden to disassemble, bump, burn the battery or reverse the positive and negative poles of the battery. Keep the positive and negative poles of the battery away from any metal object. It is strictly prohibited to pierce the battery with sharp objects. Otherwise, the battery may cause fire and put you and others in danger.
- 请在可视范围内对电池进行充电。严禁远离正在充电中的电池。
  Please charge the battery within the visible range. Never stay away from the battery that is being charged.
- 为了防止受伤，请将电池保管在小孩子手够不到的地方。
  Keep the battery out of the reach of children to prevent injuries.
- 请不要损已经损坏的锂电池进行充电。有可能引发电池的鼓胀，变形，爆炸或者火灾。
  Please do not charge any damaged lithium battery. Otherwise, the battery may be expanded, deformed, exploded or cause fire.
- 为了保护环境，已经报废的电池根据地区或国家的废弃法规进行合理处理。
  In order to protect the environment, damaged batteries should be disposed of properly in accordance with regional or national regulations on waste.



## 行驶操作 DRIVING OPERATION

前进挡
Forward gear

**当车速调闭合时转弯半径会变大**
**Turning radius increases when speed lock is closed**

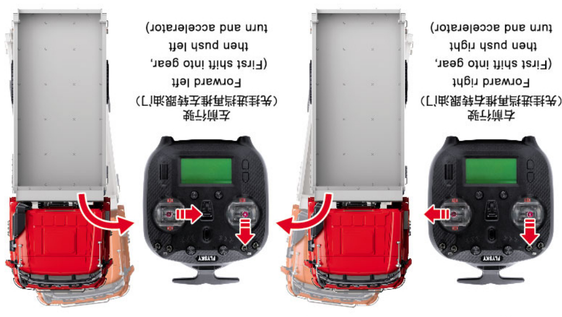


倒退挡
Reverse gear

## 遥控器电池安装 INSTALLATION OF REMOTE CONTROL BATTERIES

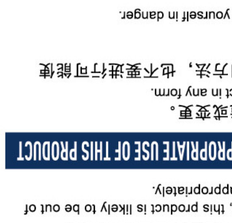


1. 打开电池仓盖。
   Open the battery compartment cover.
2. 将4节电量充足的1.5V "AA" 非充电电池装入电池仓内，确保电池上的金属端子与电池仓内的金属端子相接。
   Put 4 fully charged 1.5V "AA" non-rechargeable batteries into the battery compartment, and make sure that the metal terminals on the battery are connected to the metal terminals in the battery compartment.
3. 盖好电池仓盖。
   Close the battery compartment cover.

### ⚠ 遥控器电池的注意事项
### PRECAUTIONS FOR REMOTE CONTROL BATTERIES

1. 不得使用充电的"AA"电池。
   Do not use rechargeable "AA" batteries.
2. 新旧电池不可混合使用。
   Do not mix old batteries with new ones.
3. 请使用同等效或推荐类型的电池。
   Please use the battery in the equivalent or recommended type.
4. 确认好正负极后，将"AA"电池正确装入遥控器。
   Install the "AA" batteries into the remote control unit correctly after confirming the positive and negative poles.
5. 电池端子不要短路。
   Do not short-circuit the battery terminals.

## 液压油添加 ADDITION OF HYDRAULIC OIL

1. 拧开油箱盖。
   Unscrew the oil tank cover.
2. 将100ml的46#液压油全部注入油箱里，拧上盖子。
   Pour 100ml of 46# hydraulic oil into the oil tank, screw on the cover.

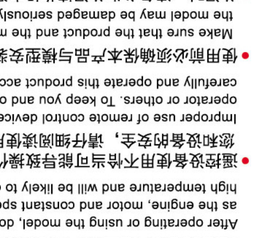


**⚠ 警告 WARNING**

"46#液压油"严禁食用！如不慎滴入眼睛，请用清水冲洗，并及时就医！

46# hydraulic oil should not be used as food! If it enters your eyes accidentally, please rinse eyes with clear water and seek medical advice in time!

※注意油位高低：当液压油底于最底油位时请添加液压油，添加时不要高于最高油位。

**※Pay attention to the oil level. Add the hydraulic oil when the oil level is below the minimum oil level until it reaches the maximum oil level.**



## 音量调压 VOLUME ADJUSTMENT

向左旋转调小音量，向右旋转调大音量。
Rotate left to decrease the volume, and rotate right to increase the volume.

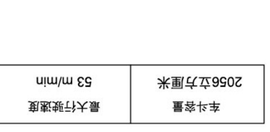


## 灯光 LIGHT

本产品可以重现灯光。
拨动灯光拨杆，可以进行打开或关闭灯光操作。
This product can reproduce the light.
The light can be turned on or off by toggling the light lever.




| 循环灯光 Cycle lights | |
|---|---|
| 1 | 双闪灯 Double flash |
| 2 | 近光灯 Low beam lights |
| 3 | 远光灯 High beam |
| 4 | 示宽灯 The width light |

## 行驶操作 DRIVING OPERATION



后退
（先挂倒挡再推油门）
Back
(hang reverse gear first, then push the accelerator)

前进
（先挂进挡再推油门）
Forward
(gear first and then push the accelerator)



## 开机 STARTUP

**遥控器Remote control unit:**

1. 检查系统状态，确保电池有电，以及自卸车未开机并且安装正确。
   Check the system status to make sure the battery is charged and the dump truck is not turned on and installed correctly.
2. 确保所有开关和摇杆处于安全位置。
   Make sure that all switches and rockers are in safe positions.
3. 长按遥控器的电源按钮，左摇杆拨到最低，取消失控保护，再把SWC拨到中位，此时遥控开机成功。
   Long press the power button of the remote control, pull the left joystick to the lowest position, cancel the out-of-control protection, and then pull the SWC to the neutral position. At this time, the remote control is successfully turned on.




长按遥控器的电源按钮
Long press the remote control power button

如果有开关未拨动到最高档位或油门摇杆（当油门摇杆为不回中时）没有打到最低位置，系统会弹出"Place all switches in their up position and lower the throttle"的提示，按照要求将开关或摇杆调整到正确位置后方可正常开启遥控器。

If any switch is not turned to the top gear or the throttle rocker (when the throttle rocker is not returned to the center) is not turned to the lowest position, the system will pop up the prompt "Place all switches in their up position and lower the throttle". Adjust the switch or rocker to the correct position as required before turning on the remote control unit normally.

## 关机 SHUTDOWN

1. 把SWC拨到最低再回中位，此时声组没有声音，说明自卸车已经熄火。
   Pull the SWC to the lowest position and then return to the middle position. At this time, there is no sound in the sound group, indicating that the dump truck has been turned off.
2. 取出自卸车电池，再关掉遥控器电源。
   Take out the dump truck battery and turn off the power of the remote control.

**关闭前，请务必先断开自卸车电源，然后关闭遥控器。如果强行关闭遥控器，将有可能导致遥控设备失控或者引擎继续工作而引发事故。**

If you are to turn off this product, please power off the truck and then turn off the remote control unit. If the remote control unit is forced off, the remote control device may lose control or the engine may continue to work and thereby cause an accident.



## 自卸车电池安装 INSTALLING THE BATTERY

自卸车安装7.4V 5000mAh 锂电池（附带）。
The dump truck is equipped with 7.4V 5000mAh lithium battery (included).

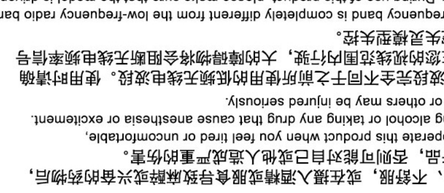

1. 打开卡扣，掀起车头，拉出线端口。
   Open the buckle, lift the front of the car, and pull out the cable port.

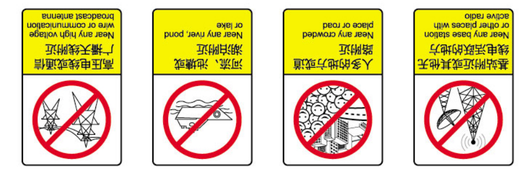


2. 将电池与自卸车端口正确连接并紧密结合。
   Connect the battery to the dump truck port properly and tightly.

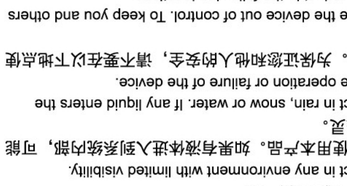

3. 将电池放入电池仓，拉紧整理好摩术带，盖上车头。
   Put the battery in the battery compartment, tighten the motorcycle belt, and cover the front of the car.



CM YK 专色：PANTONE 874 C
成品K3362中英文说明书 2022年5月27日
专色：PANTONE 874 C
口发印