# CR12 TRAIL SERIES

1:12 Scale Ready-To-Run
Electric 4x4 Off Road Truck

# 40005 CR12 Trail Series Tioga

INCLUDES LED
TWO PIECE LIGHT SET

READY-TO-RUN

## 1:12 Scale Ready-To-Run Electric 4x4 Off Road Truck Manual & Catalog

29 TIME ASSOCIATED CHAMPIONS by DESIGN
TeamAssociated.com

TEAM ASSOCIATED

## :: Safety Precautions 安全注意事項

***Please read all of the instructions and familiarize yourself with the product and its controls before operation.***

1. This product is not a toy. It is a high performance model car therefore it is important to familiarize yourself with the model, its manual, and its construction before assembly or operation. Adult supervision is necessary for children operating this model.
2. Always keep this instruction manual on hand during assembly and for operating reference.
3. Do not use a power screwdriver to install screws into plastic parts. A power screwdriver's high rotation speed can heat up the screw being installed which can result in some melting of the plastic parts or stripped threads.
4. For best performance, it is important to make sure all the moving parts can move freely without binding.
5. This product, its parts, and its assembly tools can be harmful to your health. Always exercise extreme caution when assembling and operating this product. Keep away from any high speed rotating parts during operation.

**在您開始操作本產品前，請詳閱本產品說明書。**

1. 本產品為高性能模型產品非一般玩具，組裝與操作過程皆須由成人陪同。請詳讀此本使用說明書，避免因組裝錯誤與操作不當造成損壞。
2. 請妥善保管此說明書，對於後續維修、操控說明將可提供您協助。
3. 請勿使用電動工具旋緊自攻螺絲於塑膠零件上，可能導致塑膠零件融化或滑牙。
4. 請檢視所有活動部位零件是否不受干涉，可靈活作動，以達車輛最佳性能。
5. 此項產品具有相當之危險性，於組裝、調整、操控上的不熟悉都可能造成自身或他人的傷害。

## :: Index 索引


| | | | |
|---|---|---|---|
| STEP 1 | Chassis 車體 | pg 2 | |
| STEP 2 | Front/Rear Differential 前/後差速組 | pg 3 | |
| STEP 3 | Front Axle 前傳動組 | pg 4 | |
| STEP 4 | Front Steering Set 前轉向組 | pg 4 | |
| STEP 5 | Rear Hub Set 後輪座組 | pg 5 | |
| STEP 6 | Shock Assembly 避震器組 | pg 5 | |
| STEP 7 | Front Adjustable Links 前可調連桿組 | pg 6 | |
| STEP 8 | Front Suspension 前懸吊組 | pg 6 | |
| STEP 9 | Rear Adjustable Links 後可調連桿組 | pg 7 | |
| STEP 10 | Rear Suspension 後懸吊組 | pg 7 | |
| STEP 11 | Center Gear 中央齒輪 | pg 8 | |
| STEP 12 | Center Drive Shaft 中央傳動軸 | pg 8 | |
| STEP 13 | Center Gear Case 中央齒輪箱 | pg 9 | |
| STEP 14 | Motor 馬達組 | pg 9 | |
| STEP 15 | Battery Plate 電池板 | pg 11 | |
| STEP 16 | Servo Set 伺服器組 | pg 10 | |
| STEP 17 | Steering Turnbuckle 轉向拉桿 | pg 11 | |
| STEP 18 | Side Guard 側板 | pg 11 | |
| STEP 19 | Front Bumper 前防撞板 | pg 12 | |
| STEP 20 | Rear Bumper 前防撞板 | pg 12 | |
| STEP 21 | Front Body Post 前/後車殼支柱 | pg 13 | |
| STEP 22 | Tires & Wheels 輪胎與輪框 | pg 13 | |
| STEP 23 | Body 車殼 | pg 14 | |
| STEP 24 | Body 車殼 | pg 15 | |


## :: Tools Required For Assembly 組裝維修工具

Body Reamer #1499
**車殼鑽孔器**

FT Body Scissors #1737
**車殼專用剪**

Needle Nose Pliers
**尖嘴鉗**

Wire Cutter
**斜口剪**

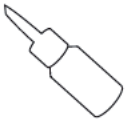

FT Locking Adhesive
(Threadlocker) #1596
**螺絲防鬆膠**

Black Grease
#6588
**潤滑油膏（黃油）**

FT Tire Adhesive
(CA Glue) #1597
**快乾膠**

FT Hex Driver Tool Set
1.5/2.0/2.5mm #1518
**六角板手組**

## :: Symbol Reference Key 說明書符號說明

Build right and left assembly
組裝左和右配件

Build front and rear assembly
組裝前和後配件

Assemble the same two parts
組裝兩次相同配件


**Associated Electrics, Inc.**
**26021 Commercentre Dr.**
**Lake Forest, CA 92630**

TEAM ASSOCIATED
WORLD CHAMPION R/C CARS

**Customer Service**
**Tel: 949.544.7500**
**Fax: 949.544.7501**

www.TeamAssociated.com · www.RC10.com · www.twitter.com/Team_Associated · www.facebook.com/TeamAssociated · www.instagram.com/TeamAssociatedRC

## STEP 1 :: Chassis 車體

M2.5 x 8mm (x16) BHCS #31521

M2.5 x 10mm (x2) FHCS #31350

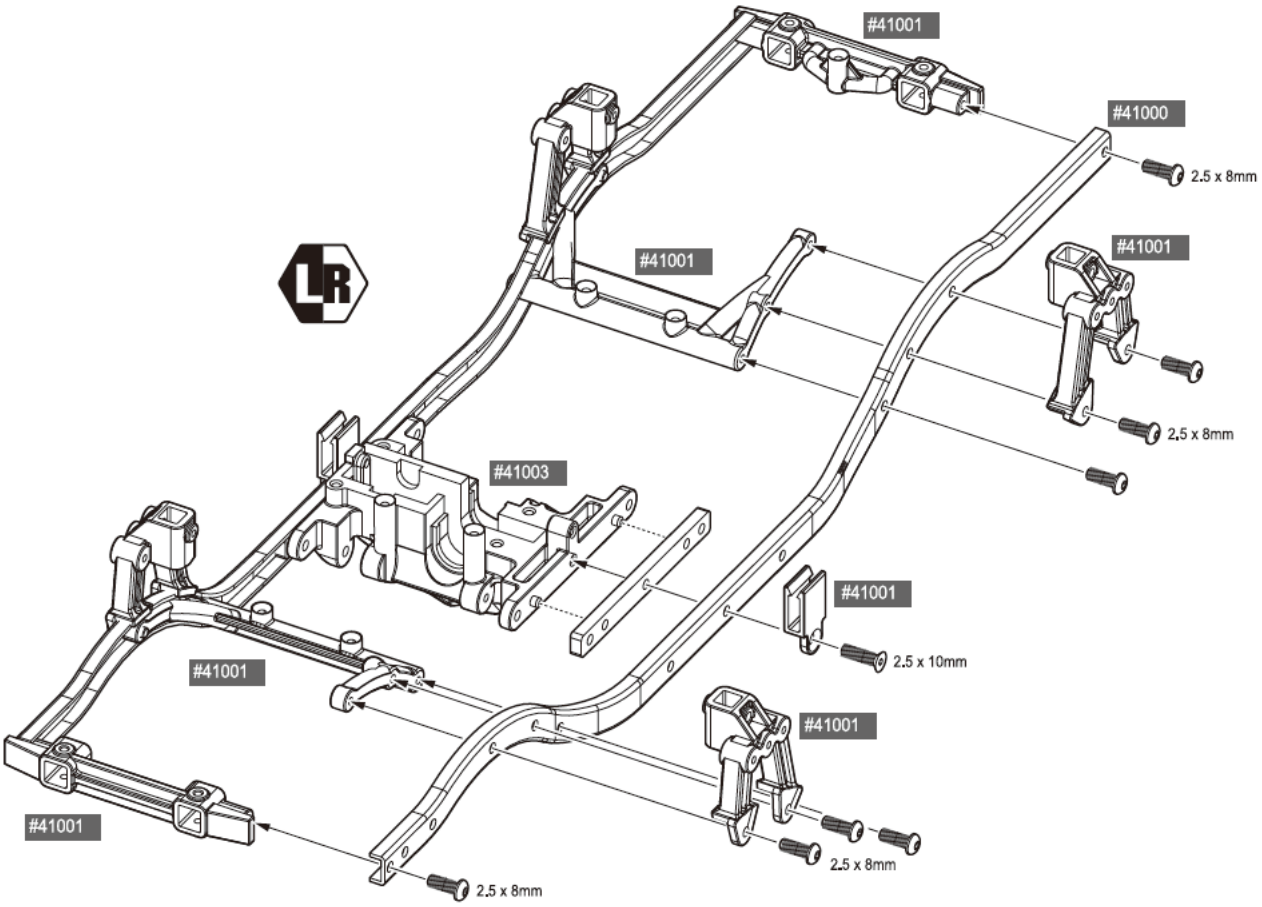

## STEP 2 :: Front/Rear Differential 前/後差速組

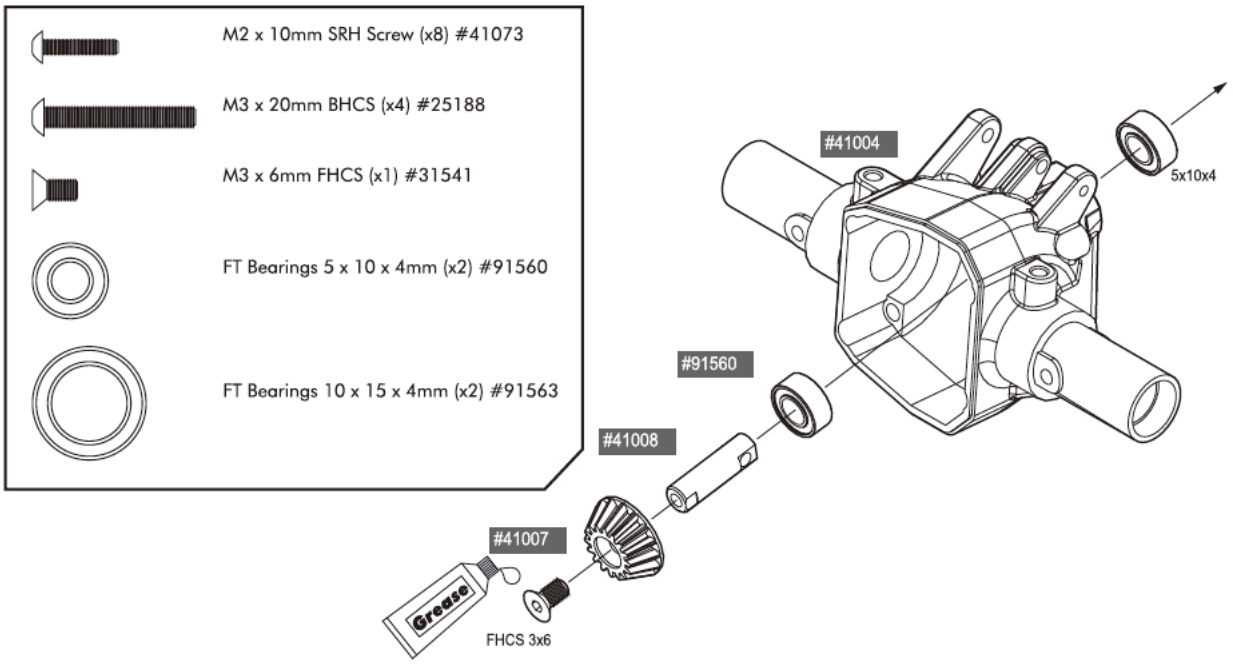


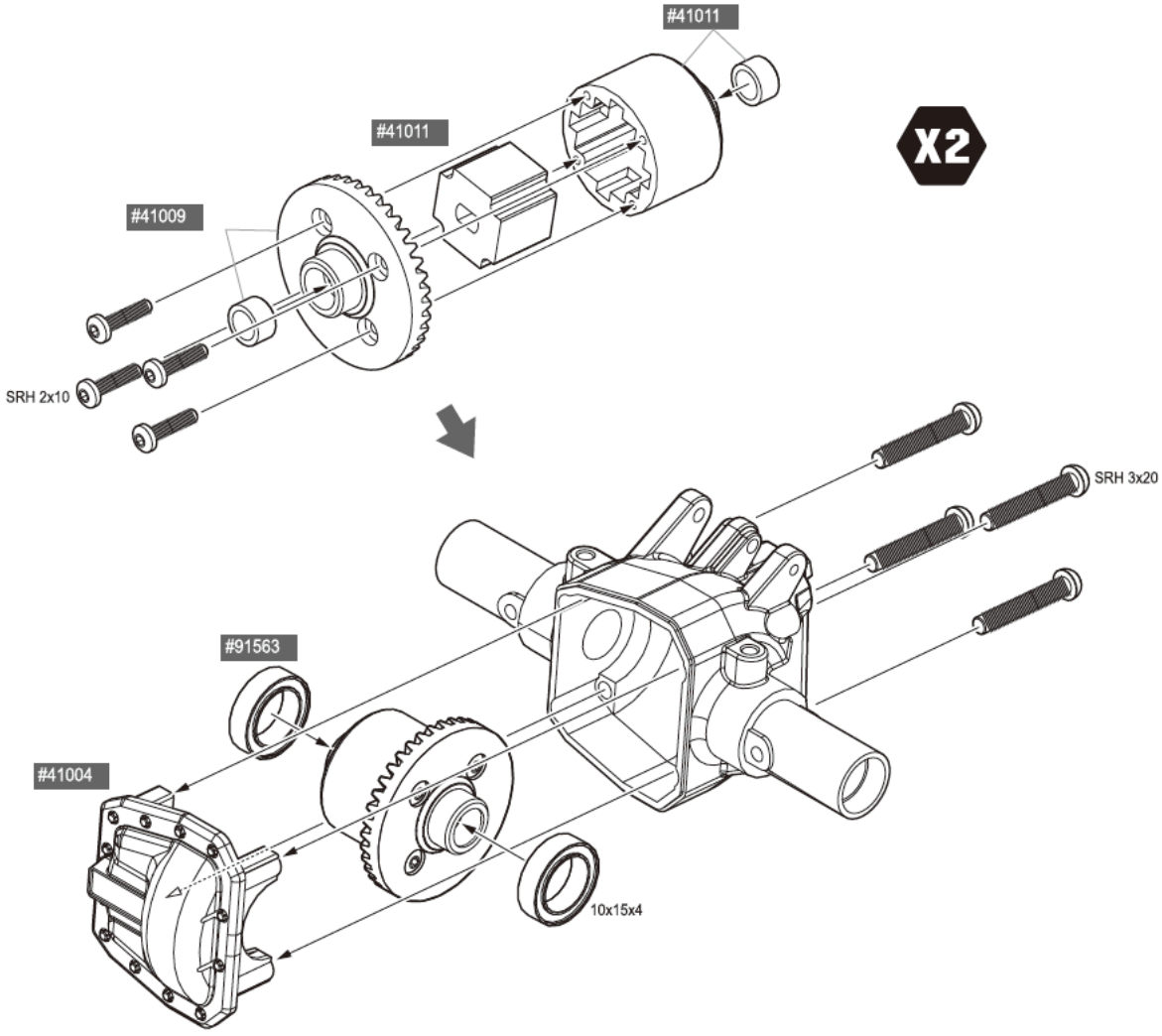

## STEP 3 :: Front Axle 前傳動組

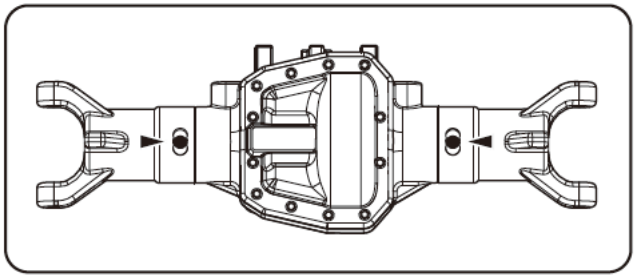

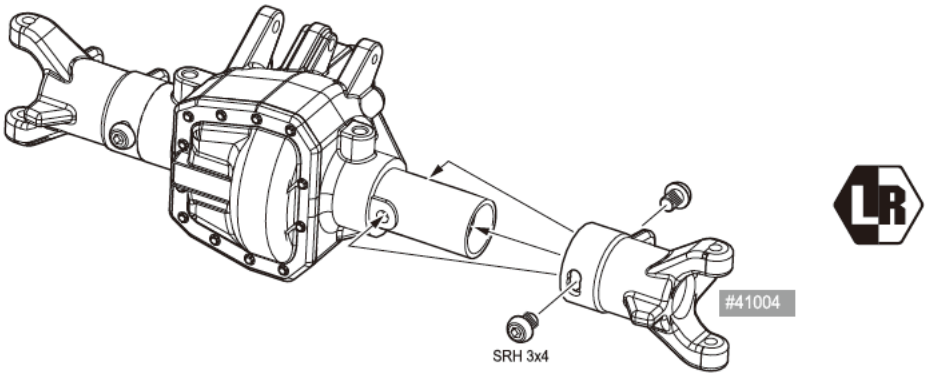


## STEP 4 :: Front Steering Set 前轉向組

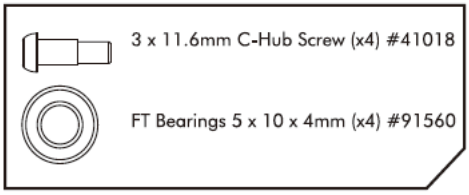


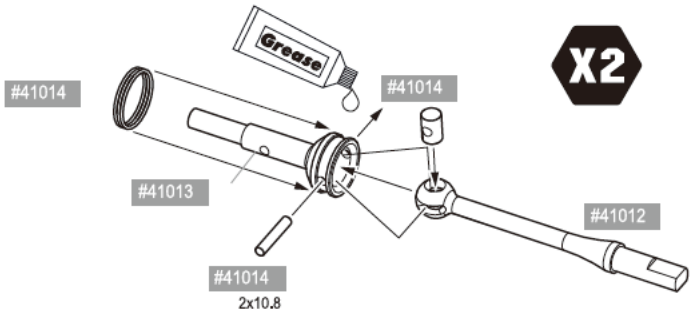


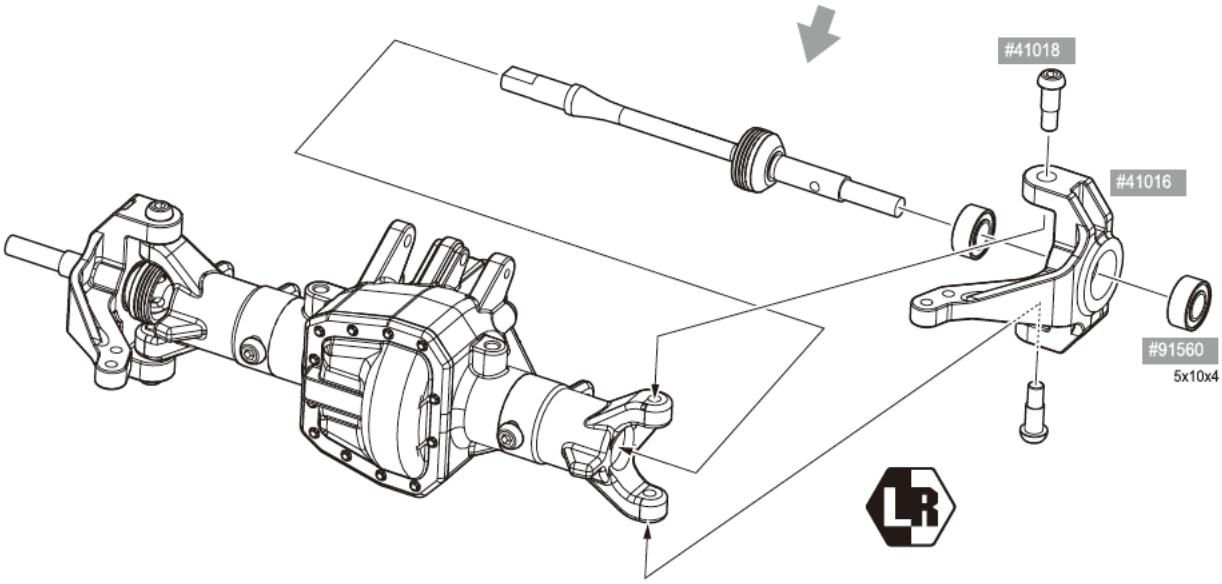

## STEP 5 :: Rear Hub Set 後輪座組

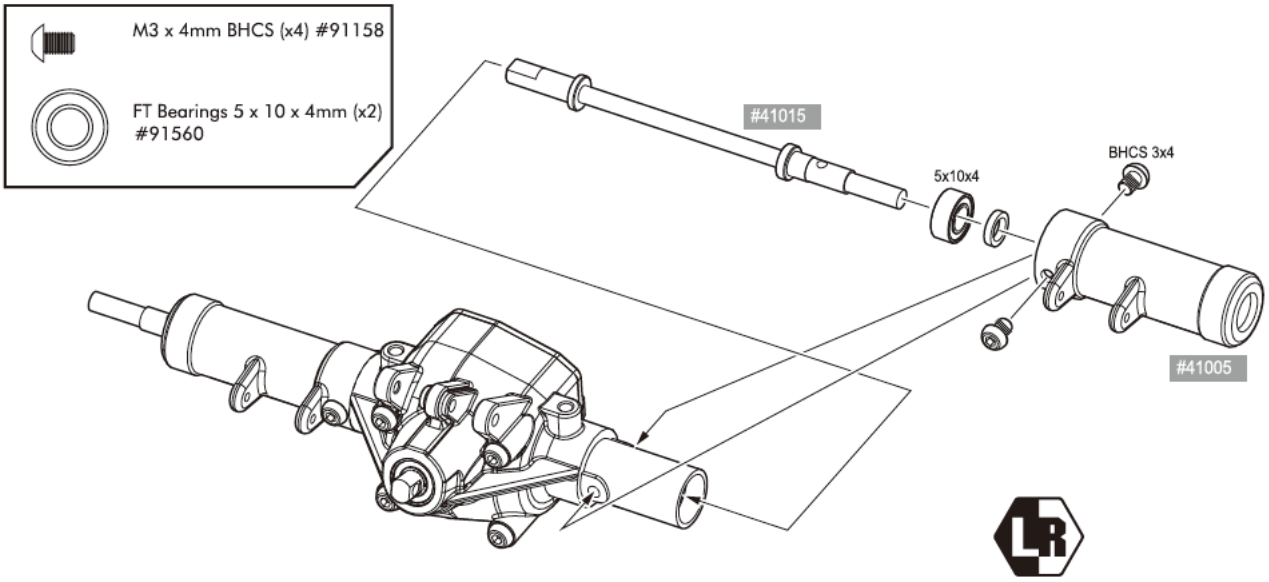


## STEP 6 :: Shock Assembly 避震器組

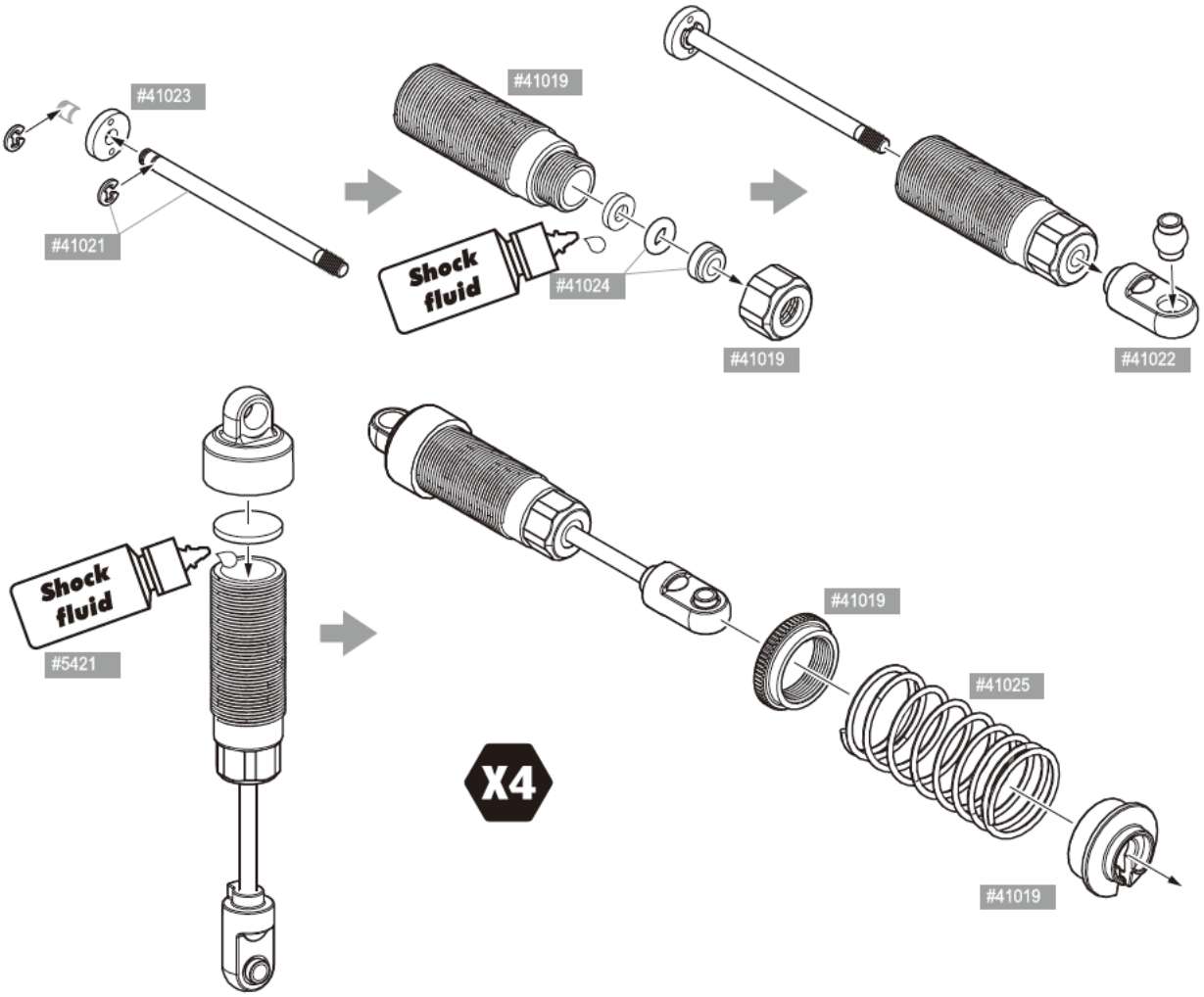

## STEP 7 :: Front Adjustable Links 前可調連桿

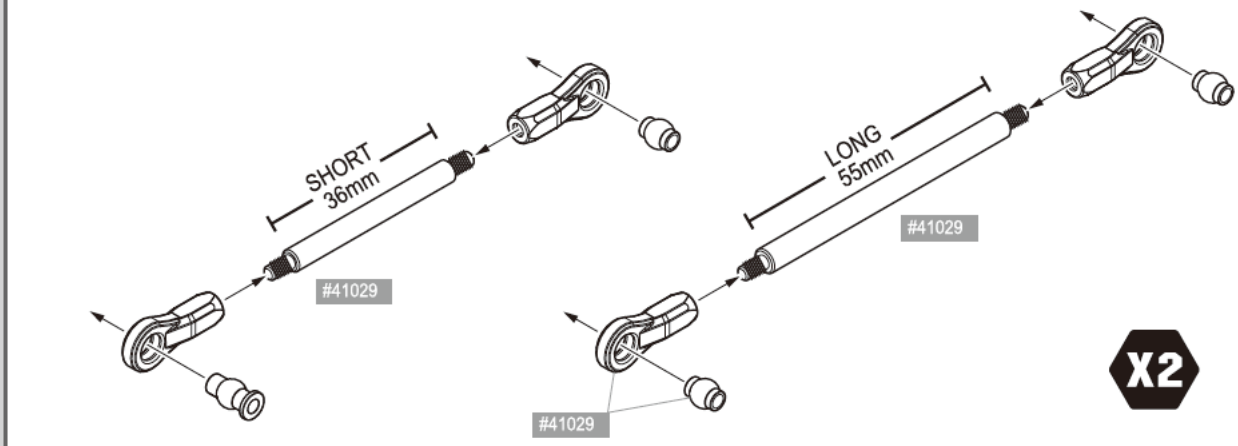


## STEP 8 :: Front Suspension 前懸吊組

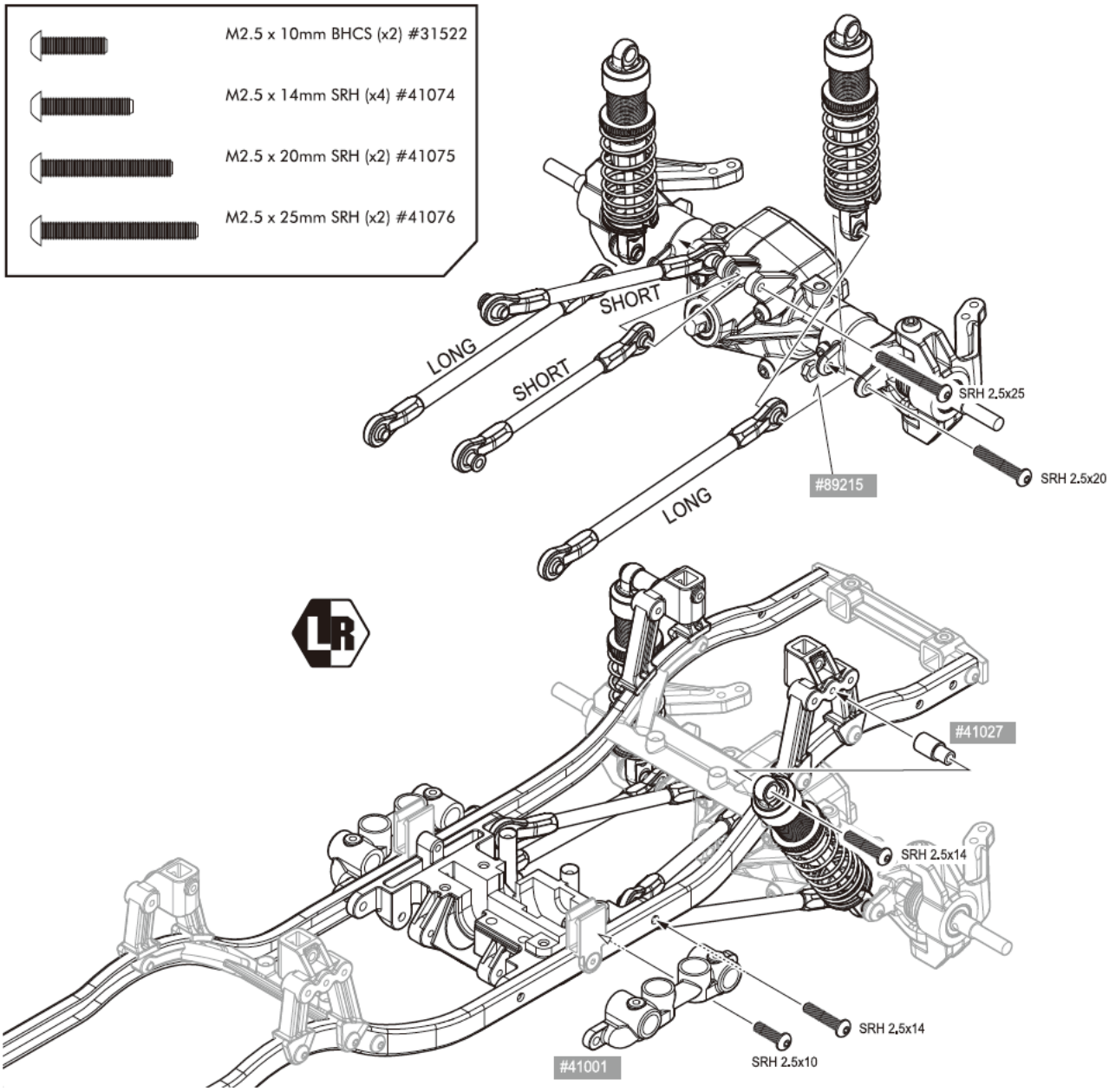

## STEP 9 :: Rear Adjustable Links 後可調連桿

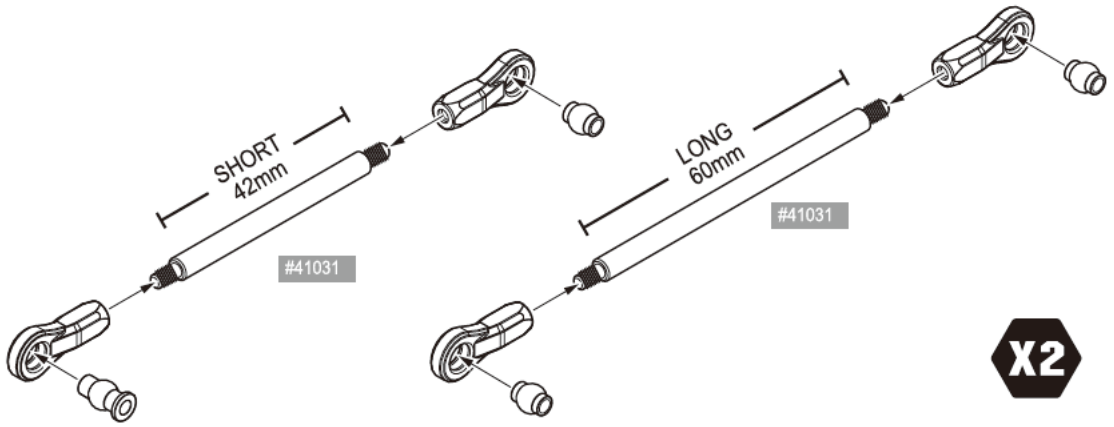


## STEP 10 :: Rear Suspension 後懸吊組

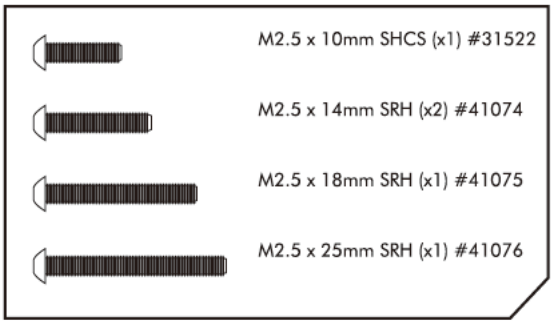


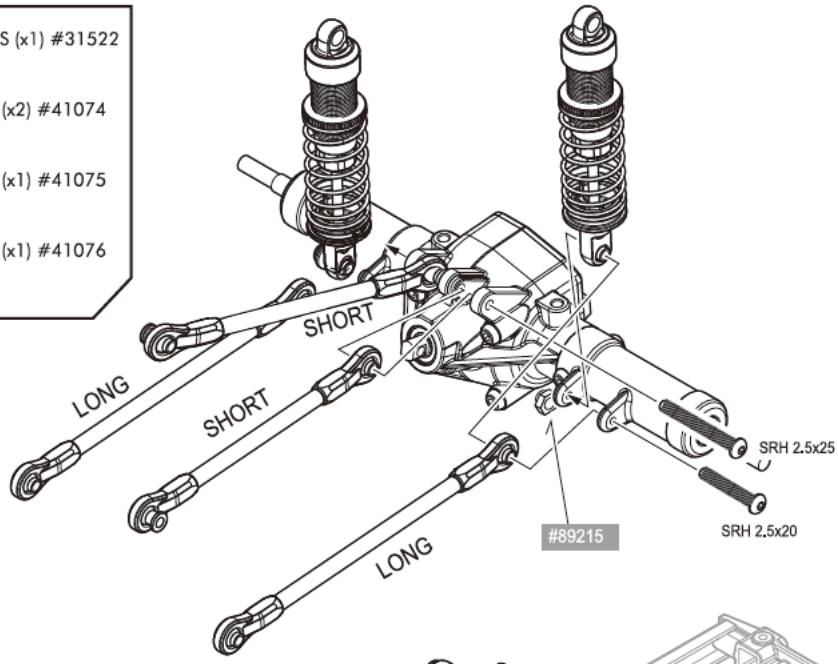


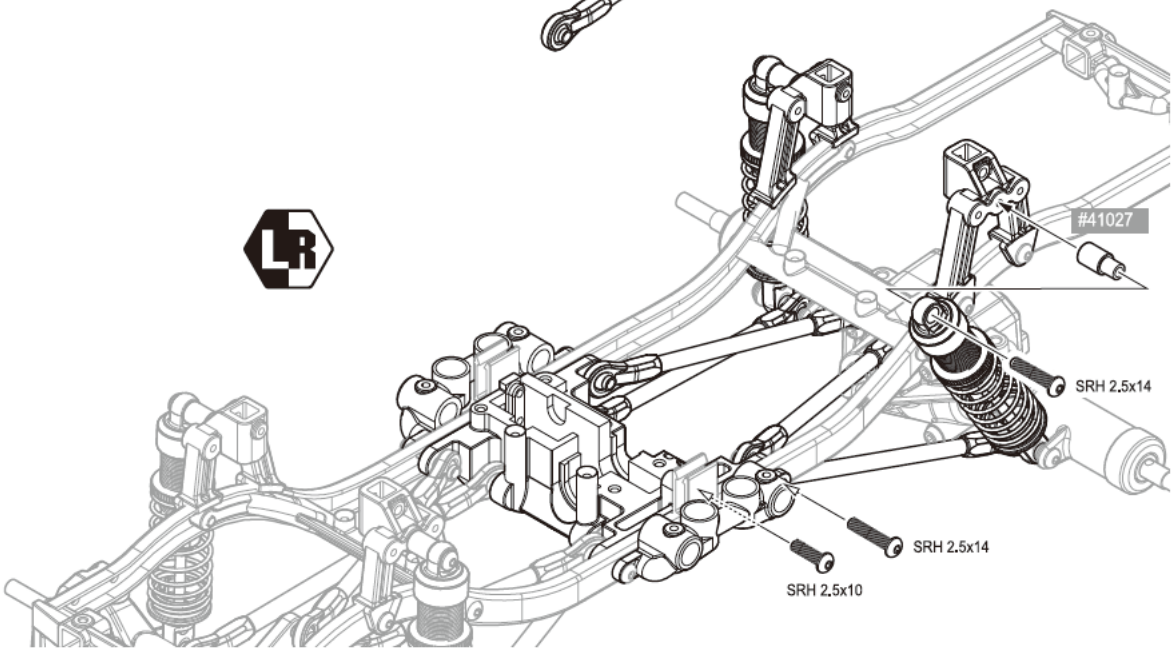

## STEP 11 :: Center Gear 中央齒輪

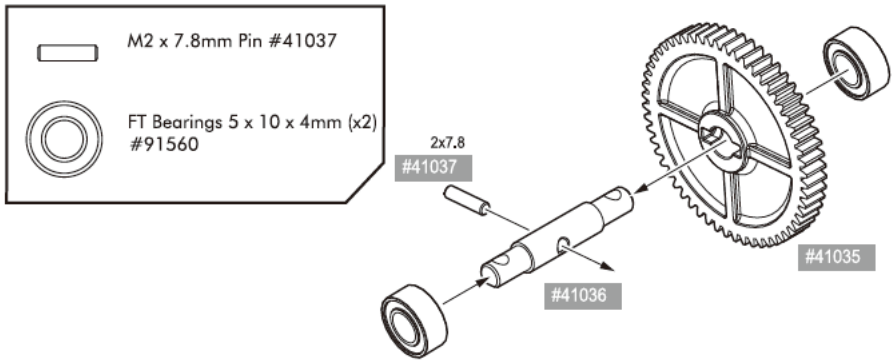


## STEP 12 :: Center Drive Shaft 中央傳動軸

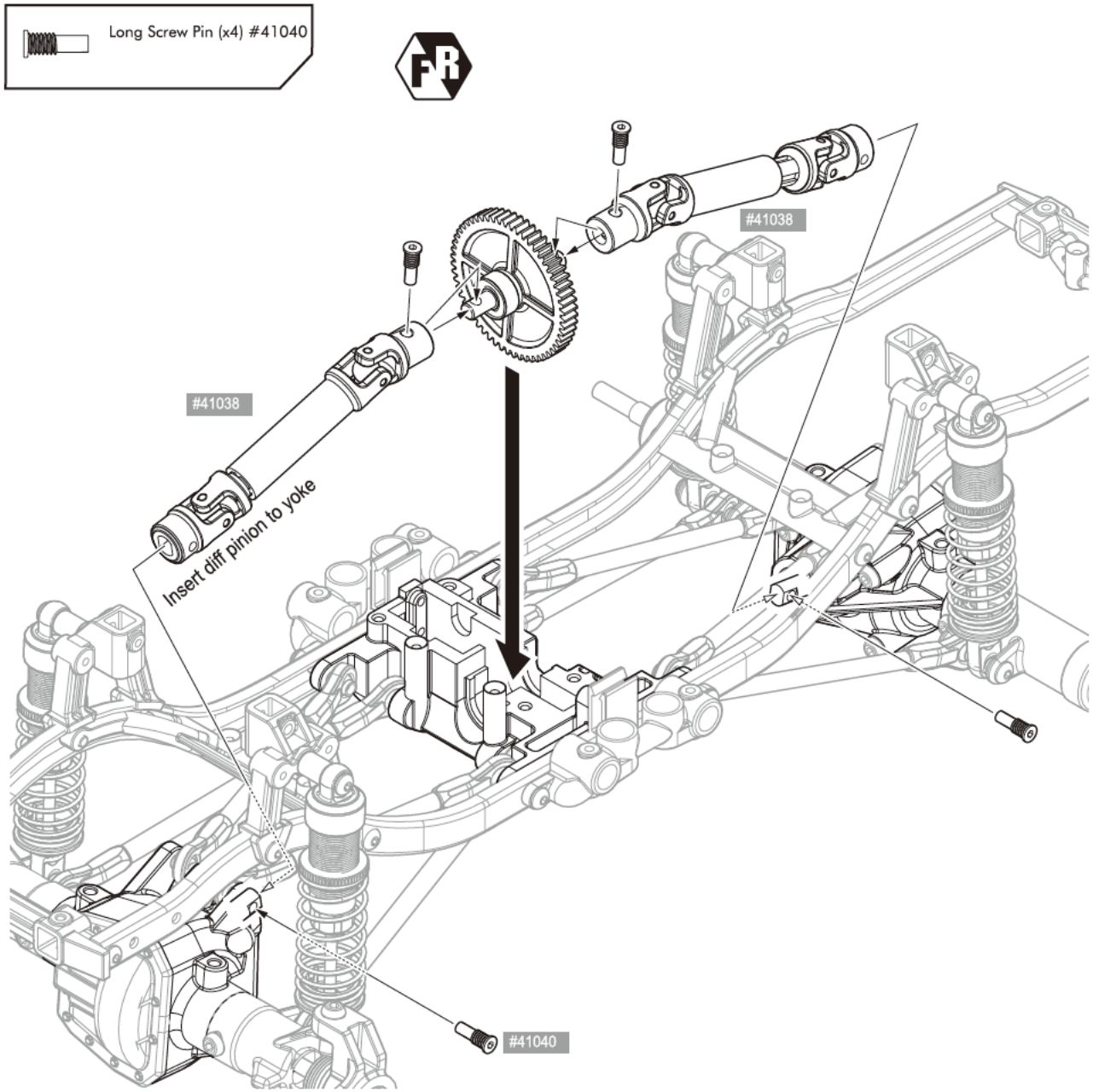

## STEP 13 :: Center Gear Case 中央齒輪箱

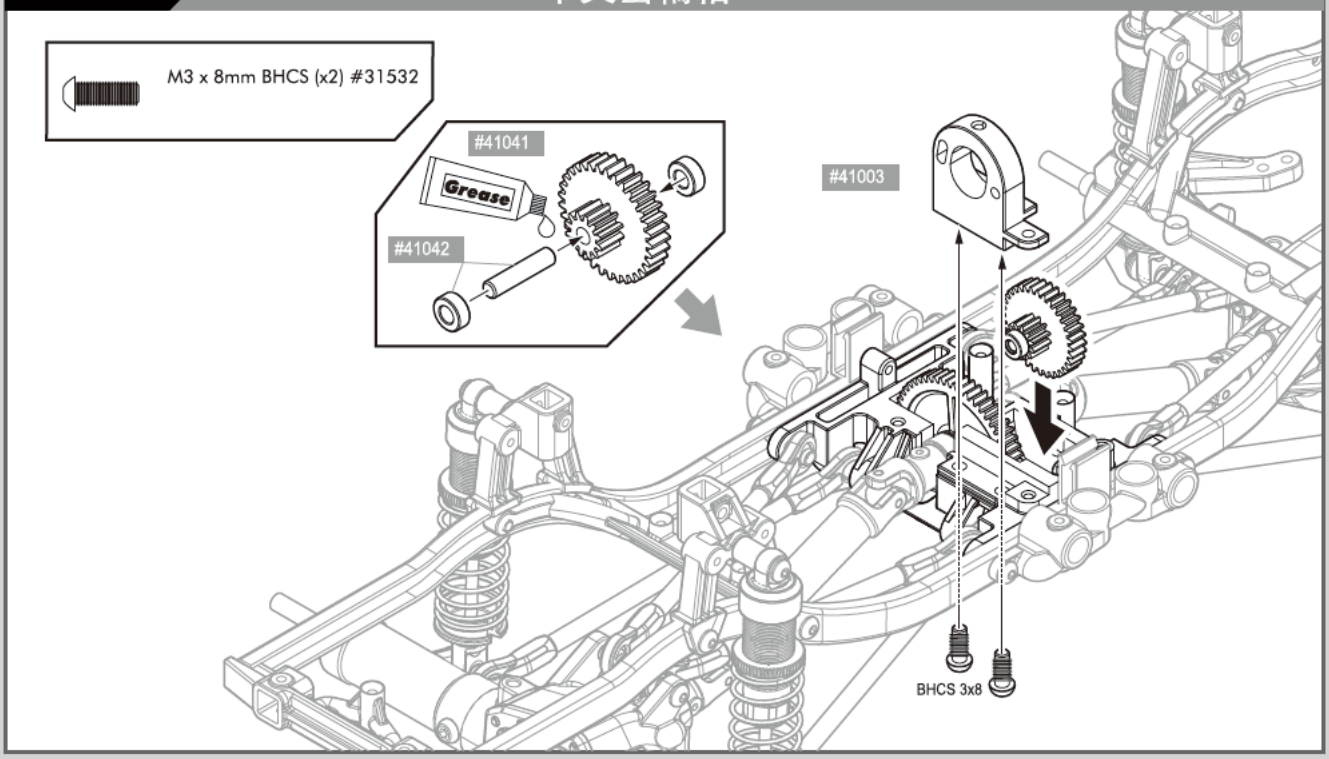


## STEP 14 :: Motor 馬達組

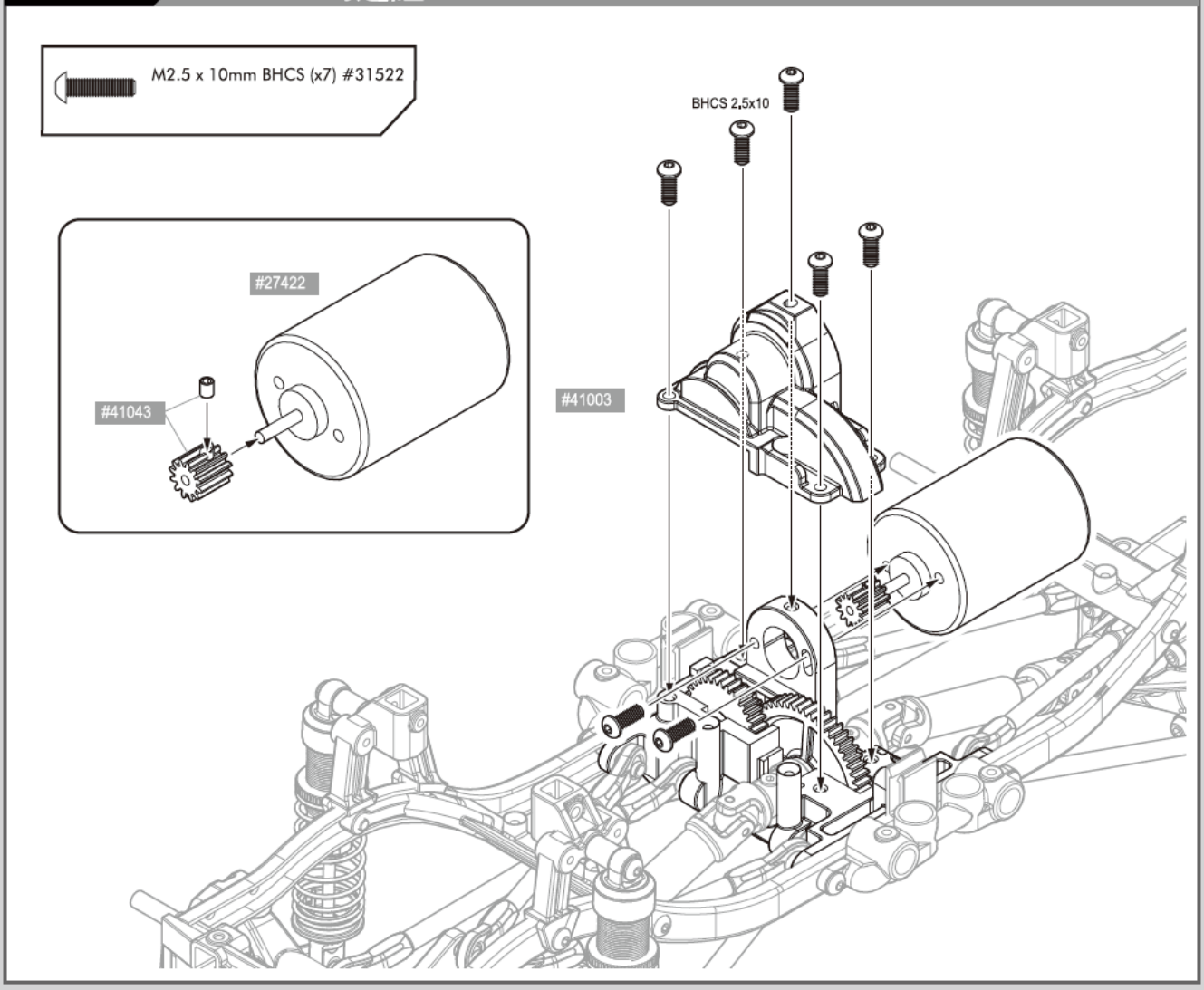

## STEP 15 :: Battery Plate 電池板

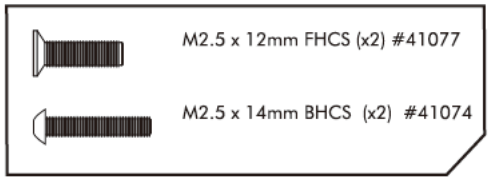


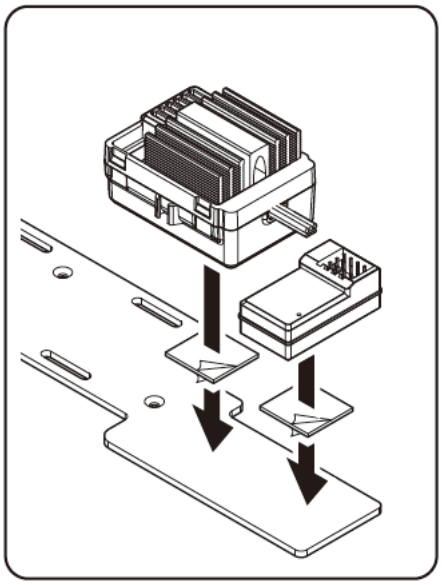

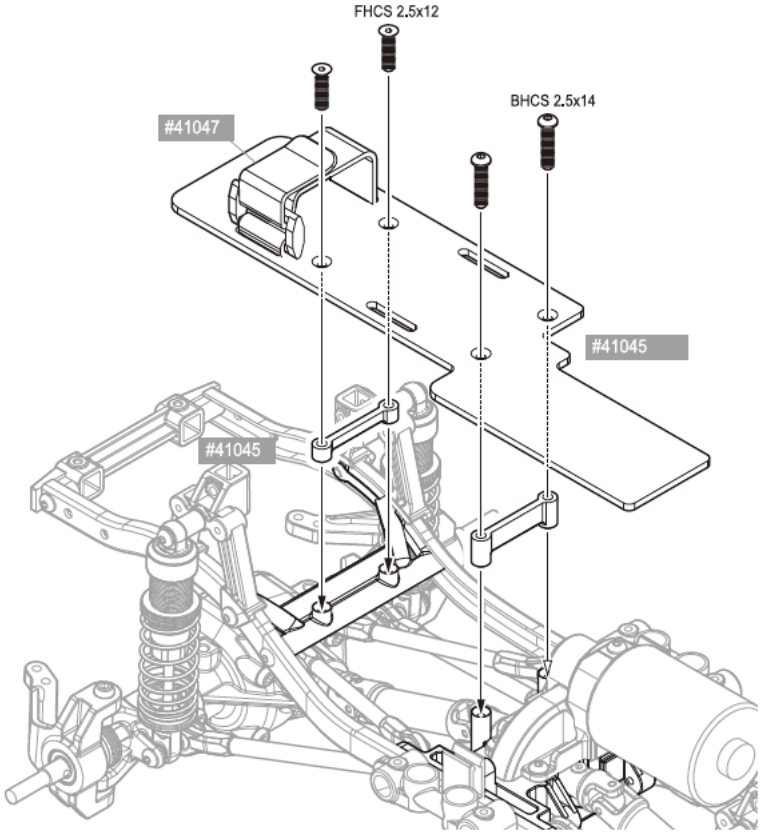


## STEP 16 :: Servo Set 伺服機組

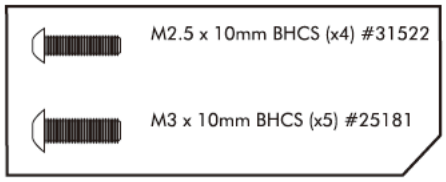


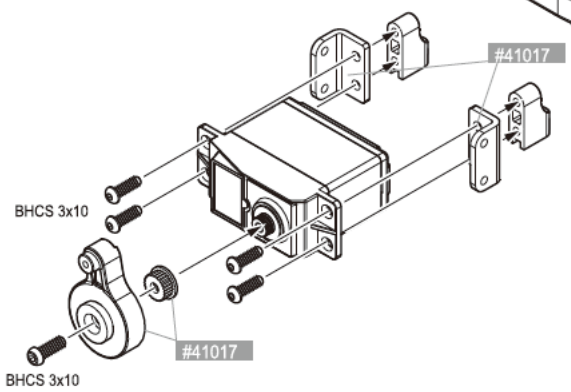


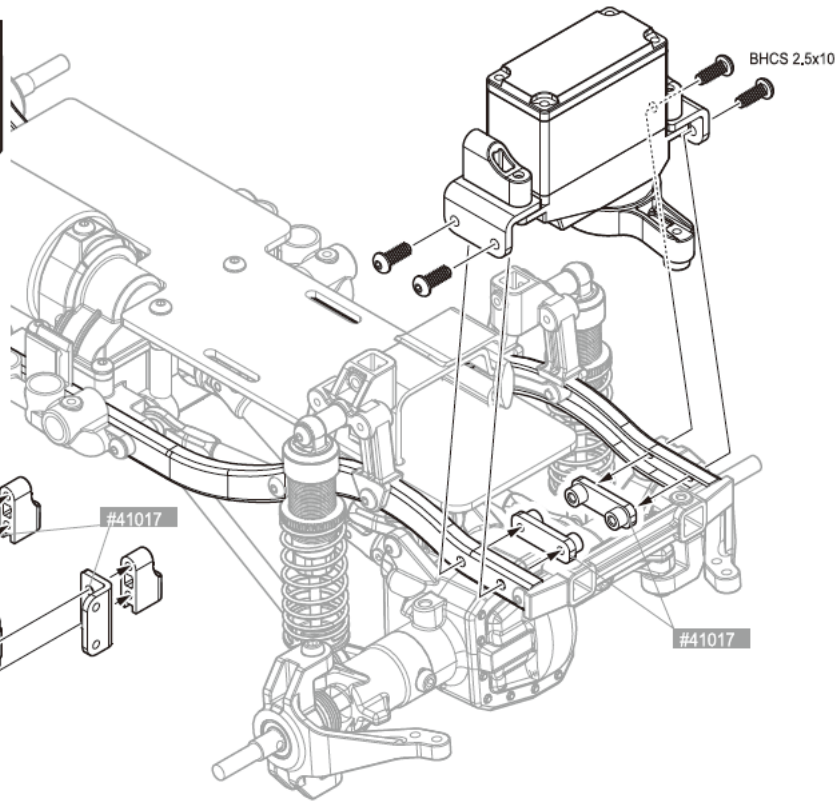

## STEP 17 :: Steering Turnbuckle 轉向拉桿

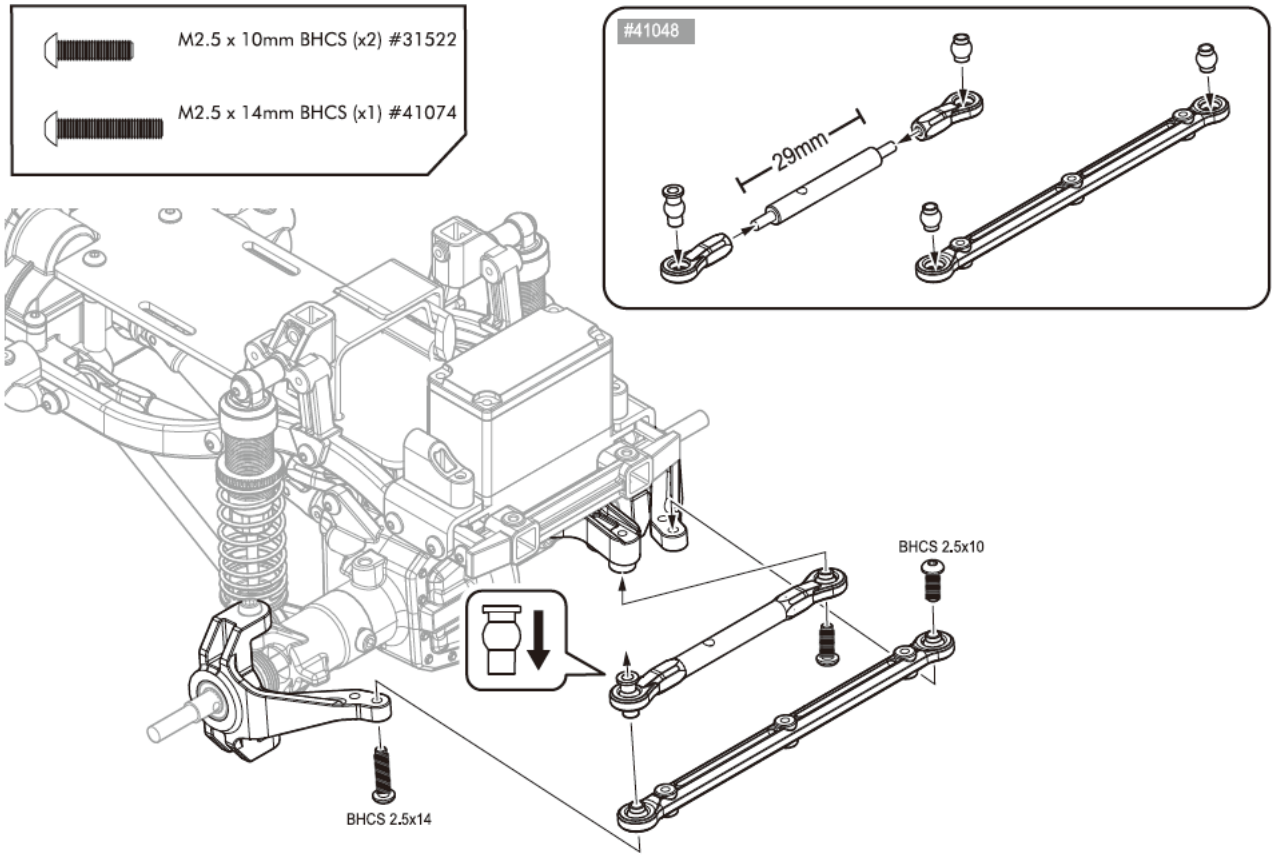


## STEP 18 :: Side Guard 側板

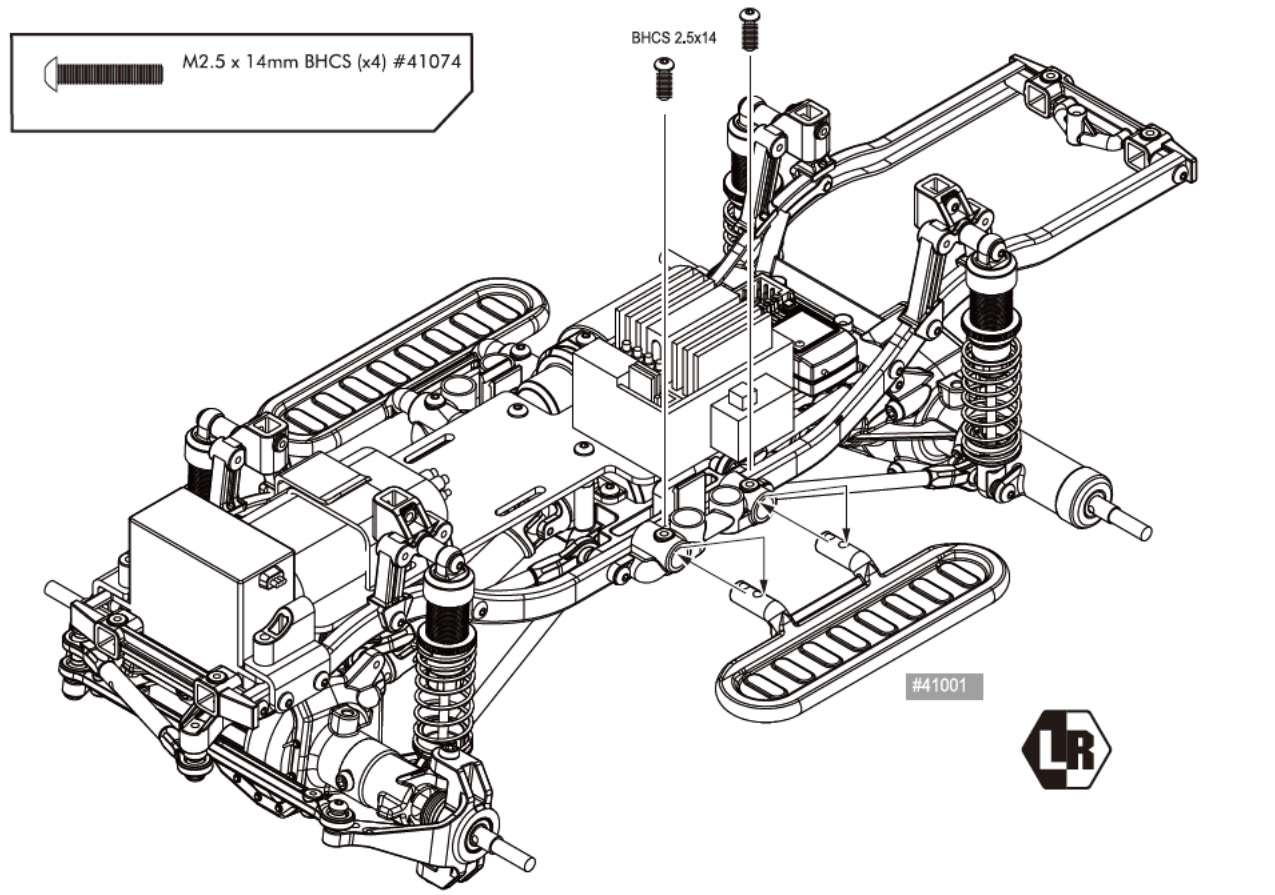

## STEP 19 :: Front Bumper 前防撞板

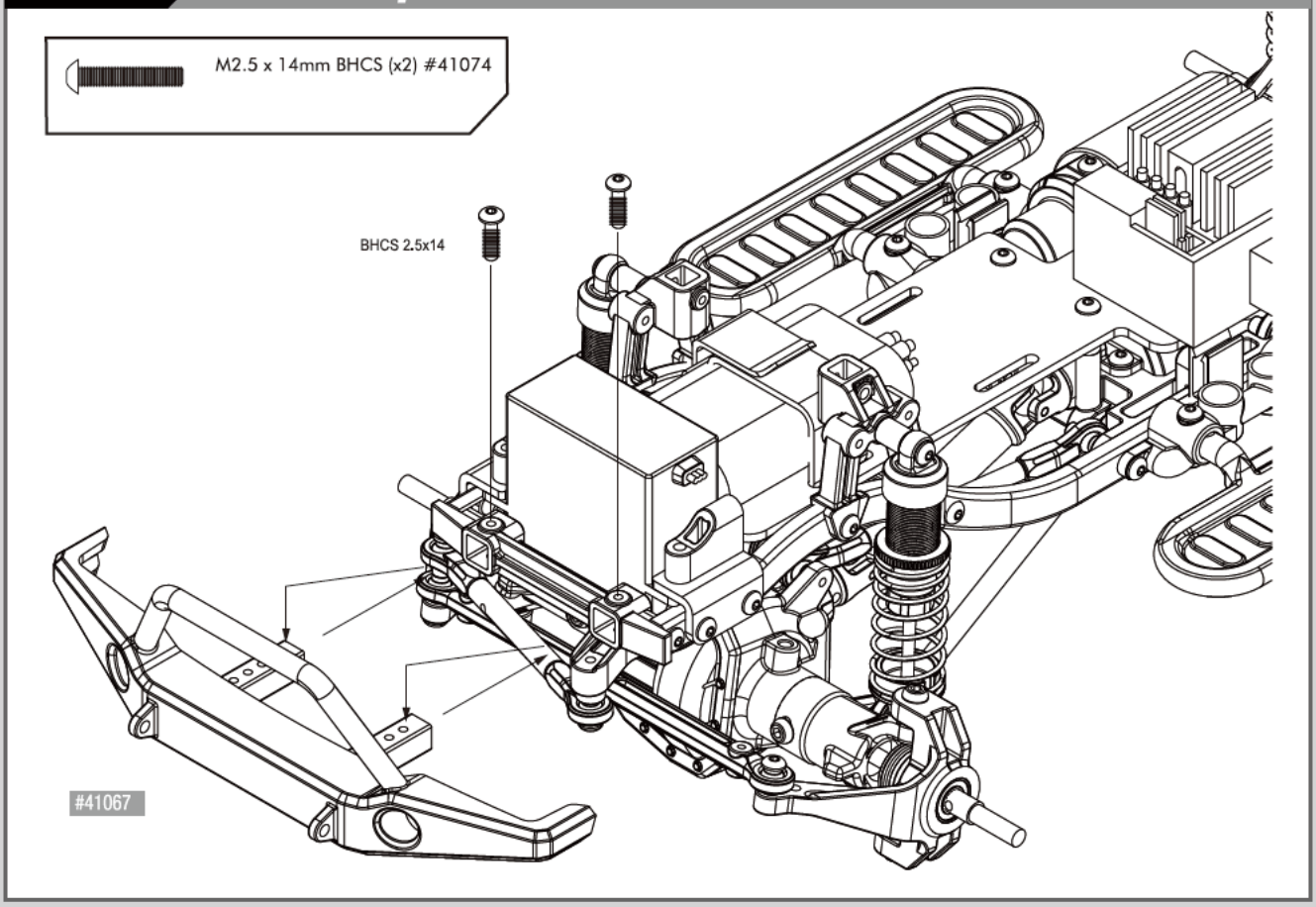


## STEP 20 :: Rear Bumper 後防撞板

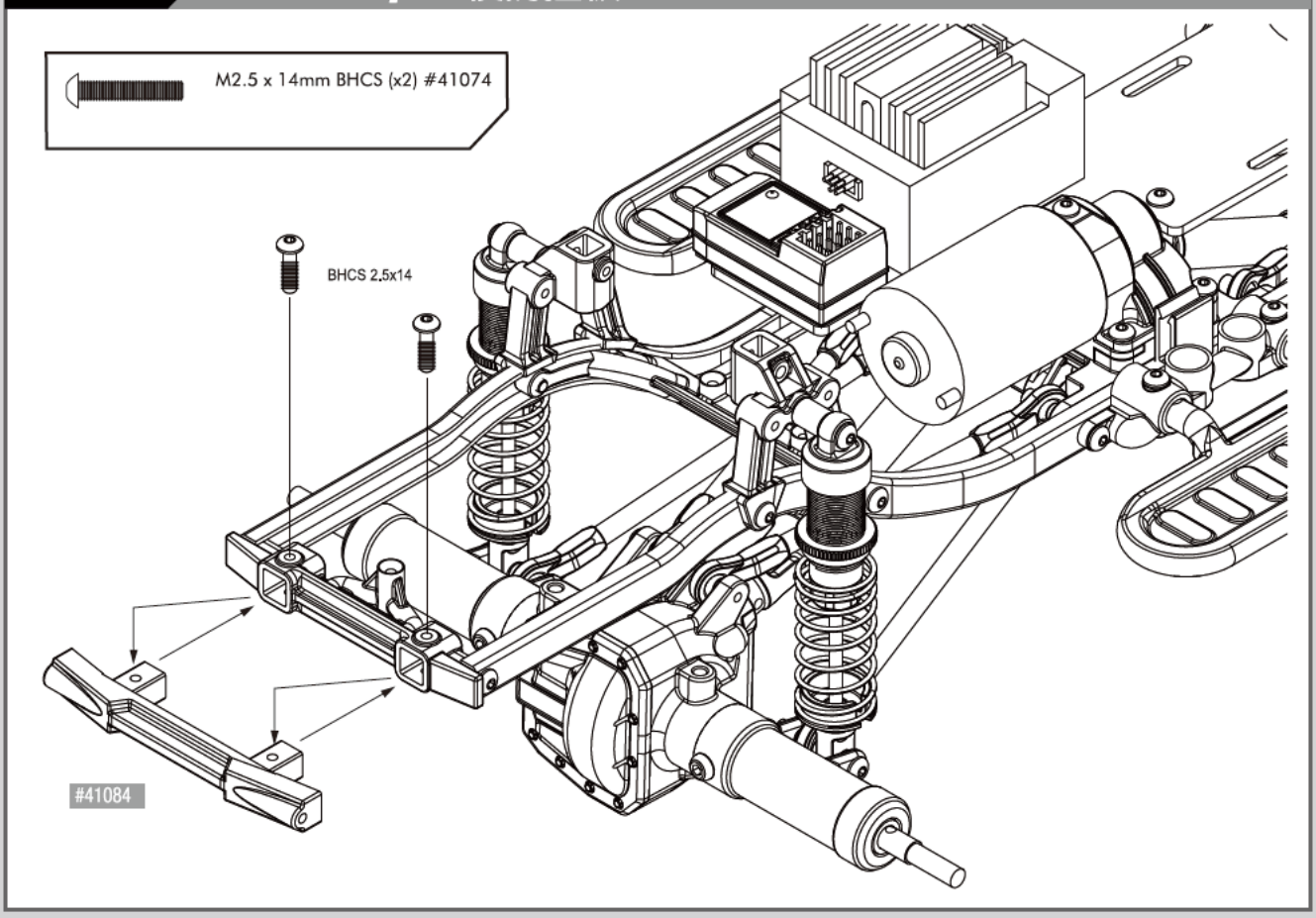

## STEP 21 :: Front Body Posts 前/後車殼柱

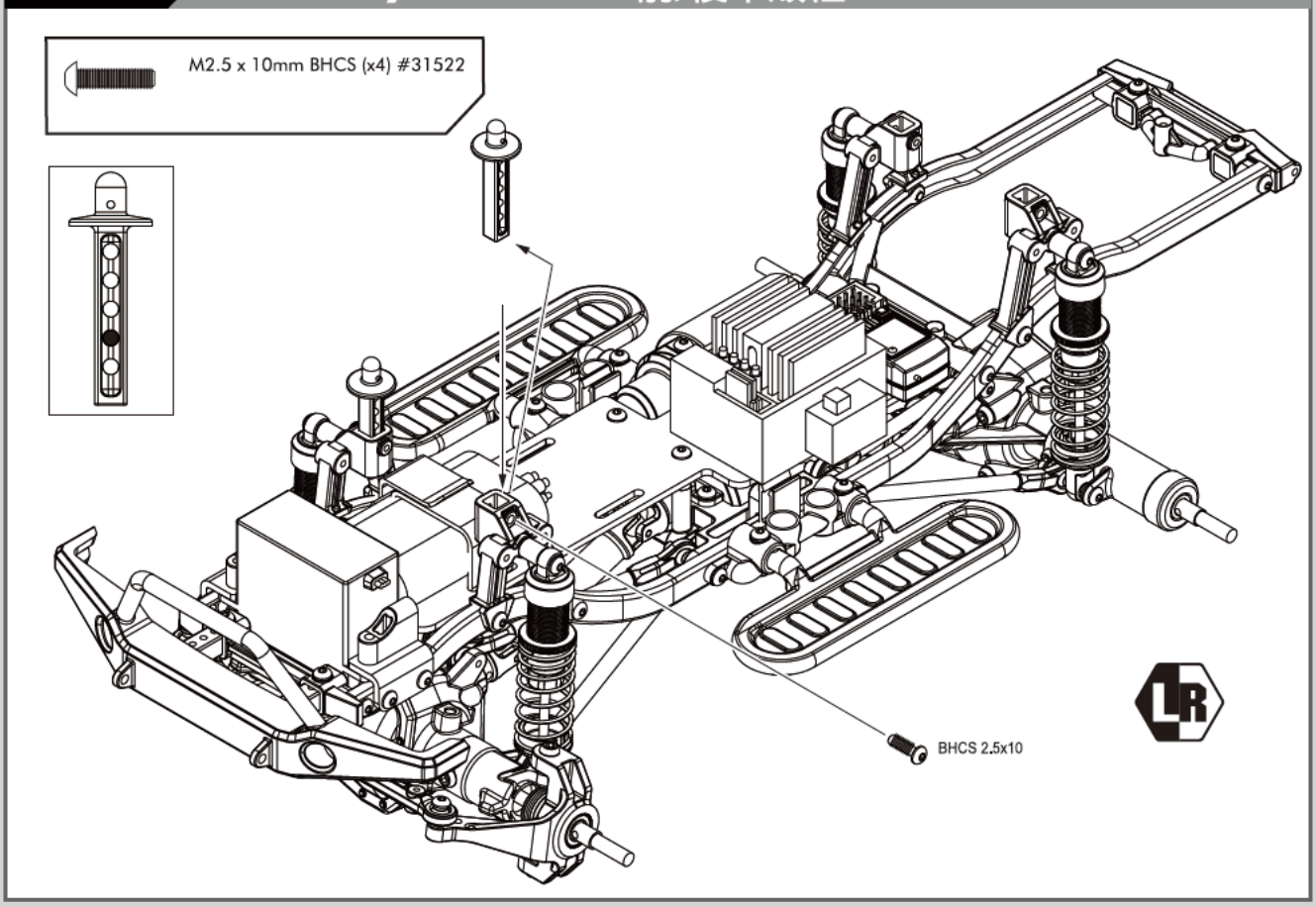


## STEP 22 :: Tires & Wheels 輪胎與輪框

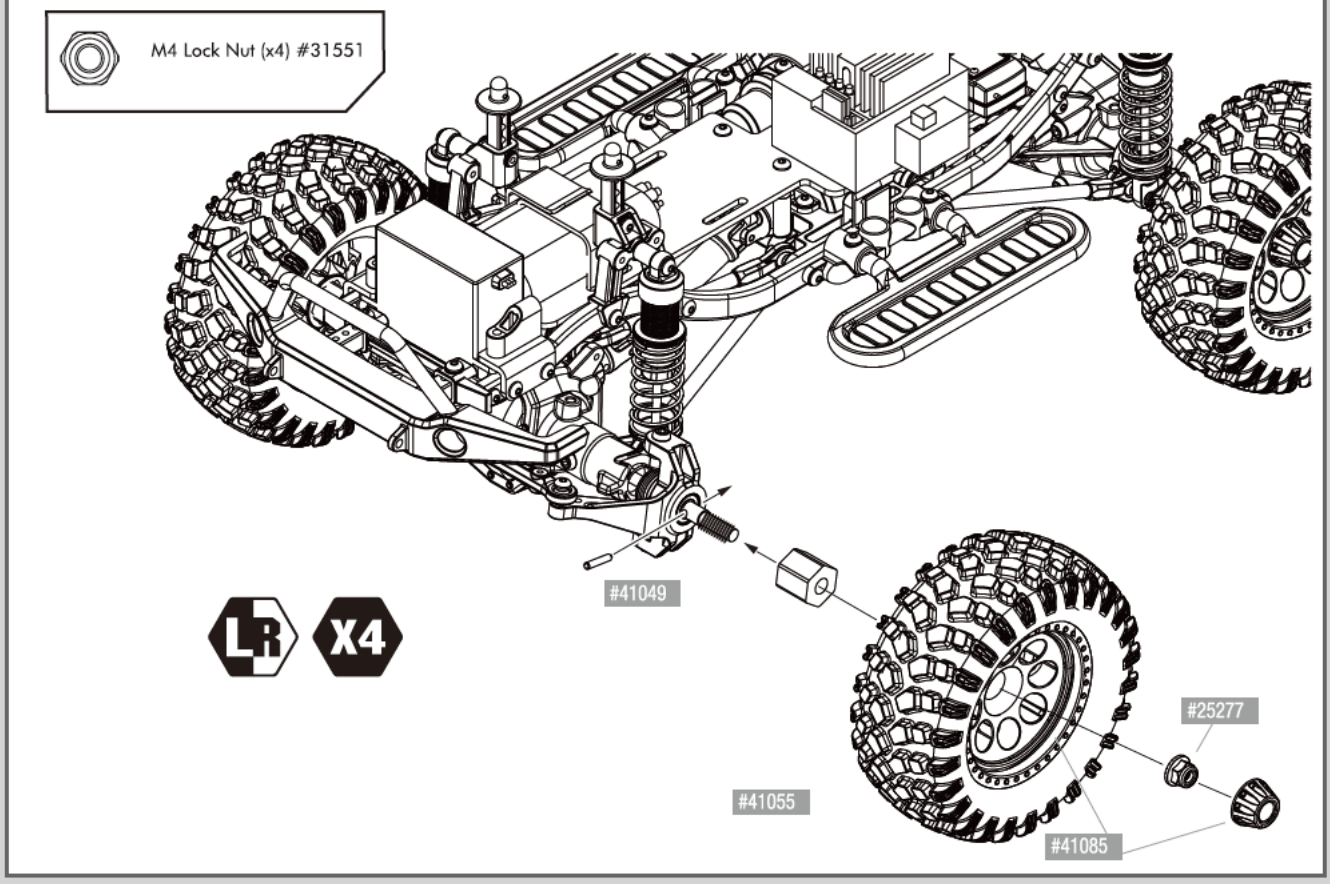

## STEP 23 :: Body 車殼

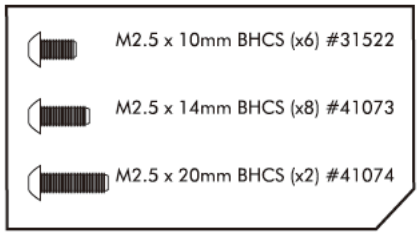


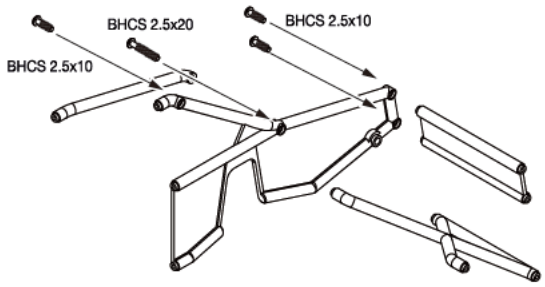


STEP 1

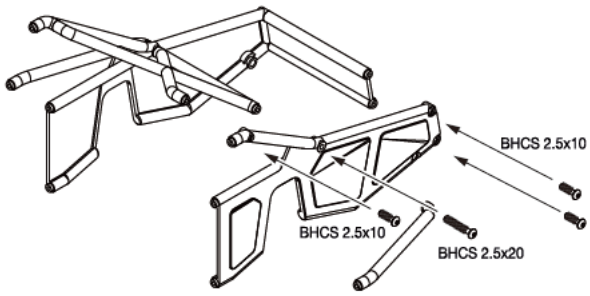


STEP 2

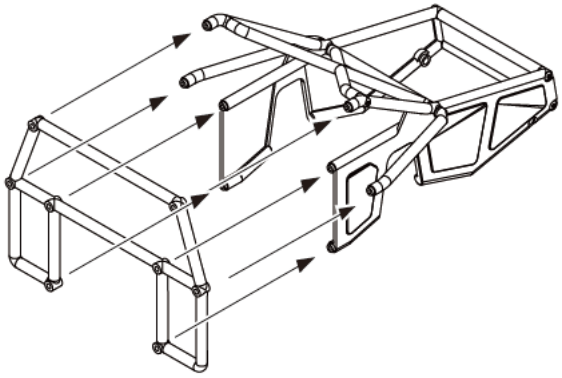

STEP 3

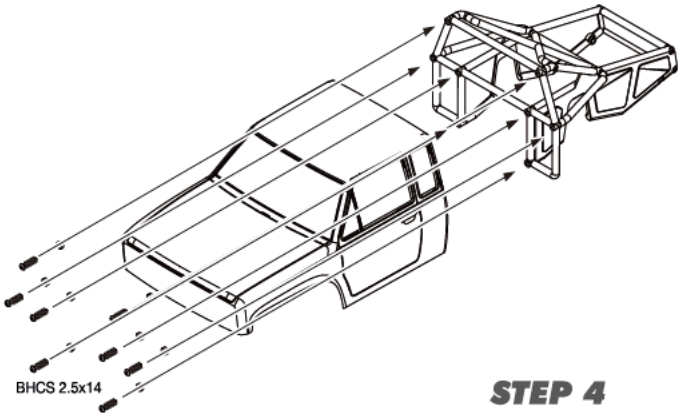


STEP 4

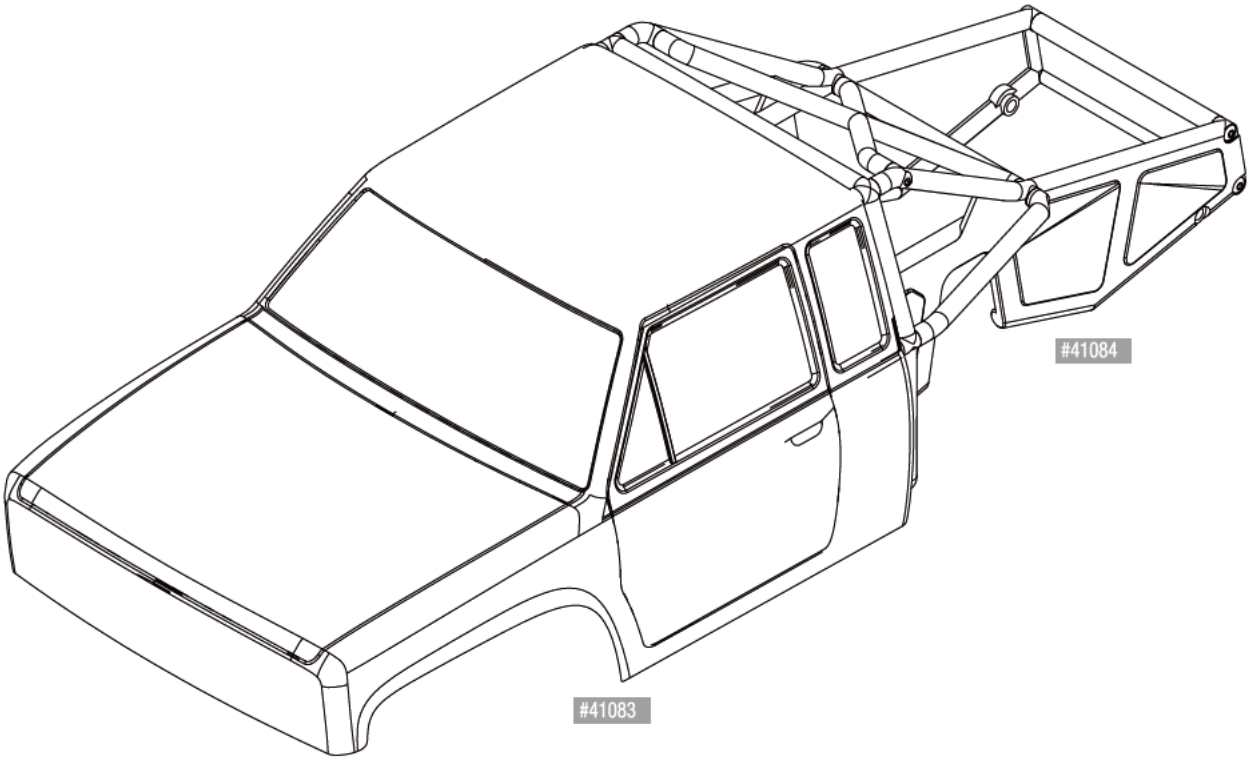

## STEP 24 :: Body 車殼

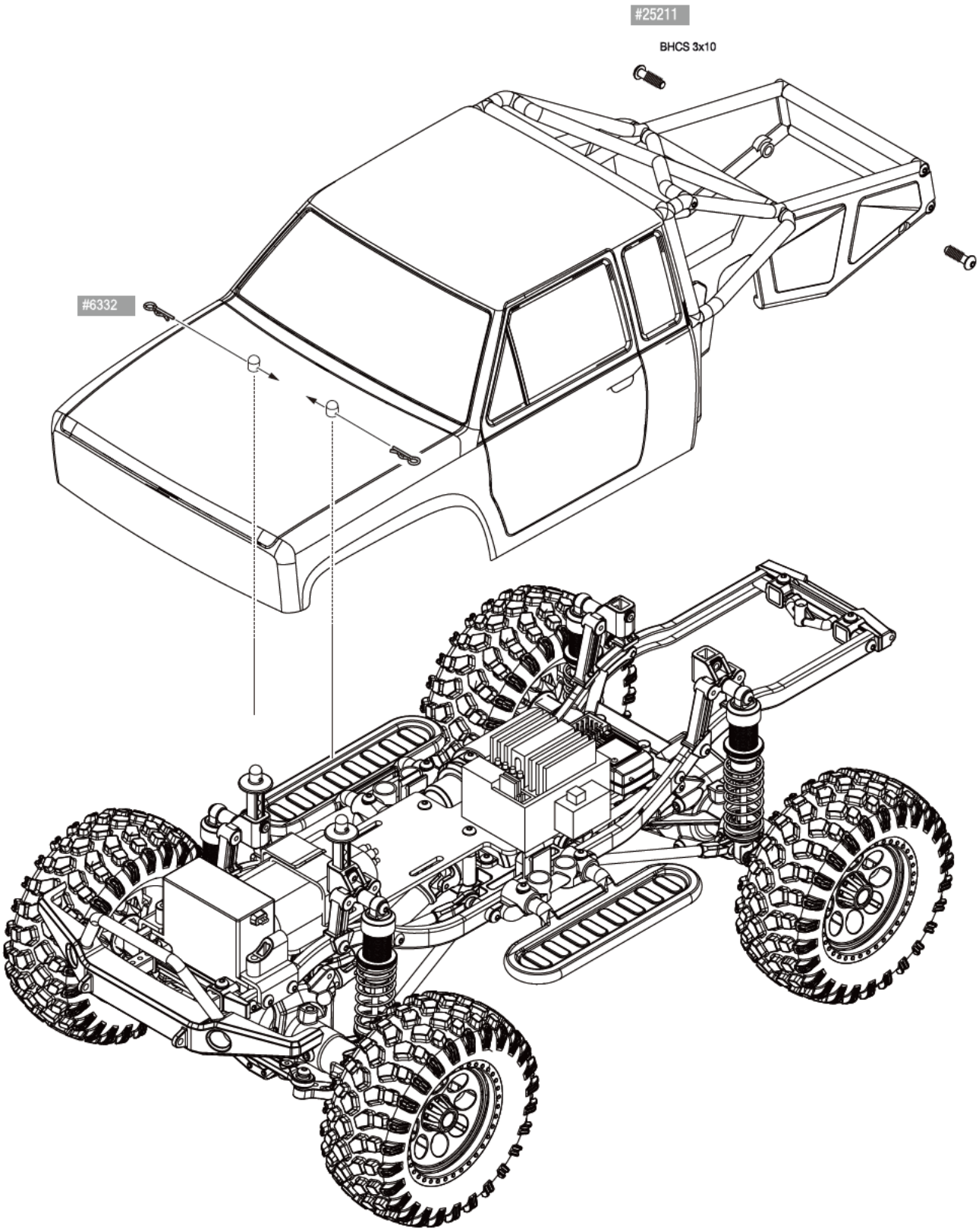

## :: Battery Charging and Installation

### Battery Charging Steps and Safety:

***Remove the battery from the vehicle before charging.***
***Place battery on a fire resistant surface.***
***Avoid any contact with water or other liquids.***
***Be sure to select the correct charging mode for the type of battery you are charging.***

***ALWAYS use a compatible charger for charging your batteries.***

***Caution: Never leave the battery unattended while charging. Always disconnect the charger from the power source when finished charging.***

***Caution: Always disconnect the battery when you are finished driving the vehicle.***

*USB wall charger not included.

***Peak Detection Quick Charger***

### Battery Installation:

***Install the battery with the battery wires directed towards the speed control and strap until battery is snug.***

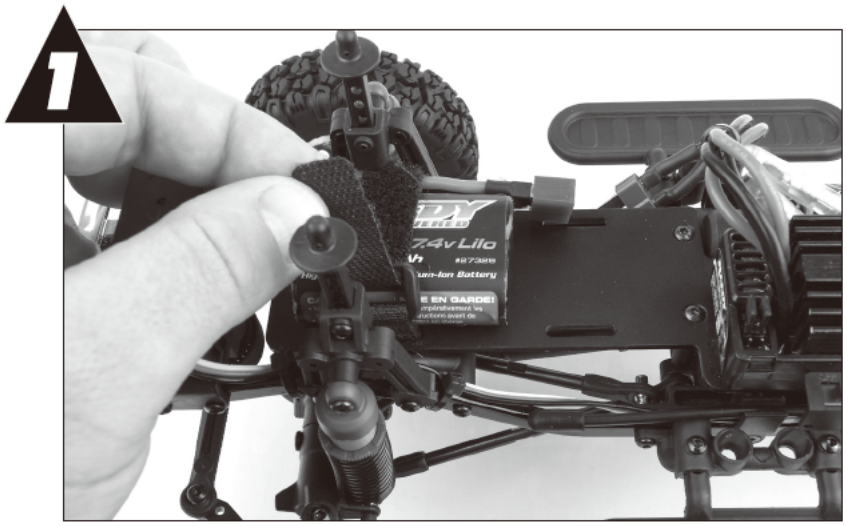


***Connect the power plug from the battery to the receiving plug of the speed control.***

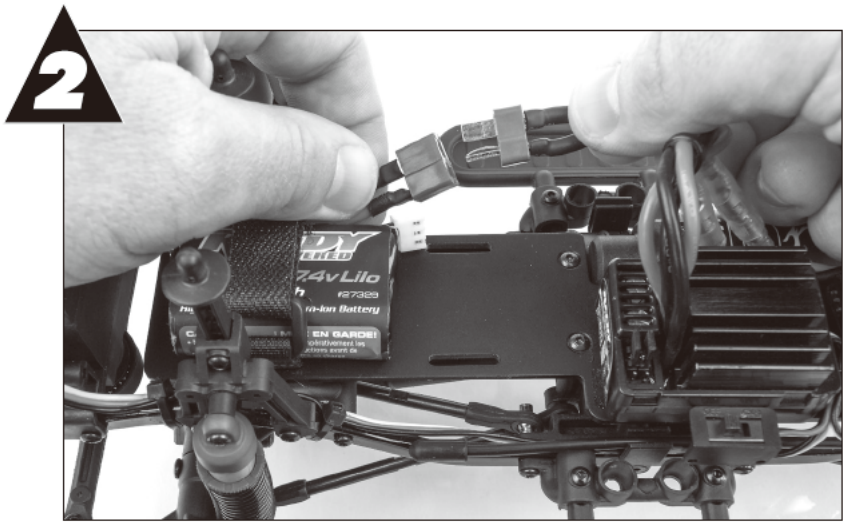

| Part # | Description |
|---|---|
| 1499 | FT Body Reamer |
| 1518 | FT Hex Driver Tool Set, 3pc. |
| 1596 | FT Locking Adhesive |
| 1597 | Factory Team Tire Adhesive, medium viscosity |
| 1737 | FT Body Scissors |
| 25211 | Screws, M3x10 mm BCHS |
| 25181 | Screws, M3x10 mm BHPS |
| 25188 | Screws, M3x20 mm BHSS |
| 25237 | Bearings, 5x10x4 mm |
| 25616 | Bearings, 10x15x4 mm |
| 27101 | RT1508 Digital HV Hi-Torque Competition Servo |
| 27200 | Reedy 1216-C2 Dual AC/DC Competition Balance Charger |
| 27231 | Reedy USB Li-Ion Balance Charger |
| 27329 | Reedy 850mAh 7.4V Li-Ion Battery |
| 27422 | CR380 Brushed Crawler Motor |
| 29198 | Reedy SC400 Brushed ESC w/Crawler Mode |
| 29203 | AE XP120 2.4GHz Radio System |
| 29204 | AE XP-R4 2.4GHz 4CH Receiver |
| 29287 | XP LED Trail Headlight Set |
| 31350 | Screws, M2.5x10 mm FHCS |
| 31521 | Screws, M2.5 x 8 BHCS |
| 31522 | Screws, M2.5x10 mm BHCS |
| 31532 | Screws, M3x0.5x8 mm BHCS |
| 31541 | Screws, M3x6 mm FHCS |
| 31551 | Locknuts, M4 with flange |
| 41000 | CR12 C-Channel Frame Rails |
| 41001 | CR12 Shock Towers and Bumper Mounts |
| 41002 | CR12 Body Posts |
| 41003 | CR12 Gearbox and Motor Mount |
| 41004 | CR12 Front Axle Housing and Hubs |
| 41005 | CR12 Rear Axle Housing and Hubs |
| 41007 | CR12 Input Pinion Gear |
| 41008 | CR12 Input Pinion Gear Shaft |
| 41009 | CR12 Differential Ring Gear |
| 41010 | CR12 Differential Bevel Gear, metal |
| 41011 | CR12 Differential Set |

| Part # | Description |
|---|---|
| 41012 | CR12 Front CVA Drive Shafts |
| 41013 | CR12 Front CVA Drive Cups |
| 41014 | CR12 Front CVA Rebuild |
| 41015 | CR12 Rear Drive Axles |
| 41016 | CR12 Steering Blocks |
| 41017 | CR12 Servo Saver and Servo Mounts |
| 41018 | CR12 Steering Block Screws |
| 41019 | CR12 Shock Set, plastic parts |
| 41021 | CR12 Shock Shafts |
| 41022 | CR12 Shock Rod Ends |
| 41023 | CR12 Shock Pistons, 2 holes |
| 41024 | CR12 Shock Rebuild Kit |
| 41025 | CR12 Shock Springs, 0.8 mm |
| 41027 | CR12 Shock Cap Bushings |
| 41029 | CR12 Front Upper and Lower Links Set |
| 41031 | CR12 Rear Upper and Lower Links Set |
| 41033 | CR12 Pivot Balls, 5.0mm, short neck |
| 41034 | CR12 Pivot Balls, 5.0mm, long neck |
| 41035 | CR12 Main Drive Gear |
| 41036 | CR12 Main Drive Gear Shaft |
| 41037 | CR12 Main Drive Gear Shaft Pin |
| 41038 | CR12 Center Drive Shaft Set |
| 41040 | CR12 Drive Shaft Set Screws |
| 41041 | CR12 Step Gear |
| 41042 | CR12 Step Gear Shaft and Bushings |
| 41043 | CR12 Pinion Gear, 11T |
| 41044 | CR12 Pinion Gear, 12T |
| 41045 | CR12 Electronics Tray, metal |
| 41047 | CR12 Battery Straps |
| 41048 | CR12 Steering Turnbuckle Set |
| 41049 | CR12 Wheel Hexes and Pins Set |
| 41051 | CR12 Wheel Set, chrome |
| 41052 | CR12 Wheel Set, Black |
| 41053 | CR12 Wheel Set, Satin Silver |
| 41054 | CR12 Multi-Terrain Tires |
| 41055 | CR12 Tioga Tires |

| Part # | Description |
|---|---|
| 41056 | CR12 Ford F-150 Body, clear |
| 41057 | CR12 Ford F-150 Bumper Set, chrome |
| 41058 | CR12 Ford F-150 Bumper Set, black |
| 41059 | CR12 Ford F-150 Body, blue |
| 41060 | CR12 Ford F-150 Body, black |
| 41061 | CR12 Ford F-150 Grill and Accessories Set |
| 41062 | Toyota FJ45 Body W/Accessories, Blue |
| 41063 | Toyota FJ45 Body W/Accessories, Clear |
| 41064 | Toyota FJ45 Body W/Accessories, Grey |
| 41065 | Toyota FJ45 Bumpers And Body Accessories, White |
| 41066 | Toyota FJ45 Bumpers And Body Accessories, Satin Chrome |
| 41067 | CR12 Roll Bar and Bumper, Black |
| 41068 | Toyota FJ45 Bumpers And Body Accessories, Black |
| 41070 | Screws, M2x4mm SHCS |
| 41072 | Screws, M2x10mm BHCS |
| 41073 | Screws, M2.5x14mm BHCS |
| 41074 | Screws, M2.5x20mm BHCS |
| 41075 | Screws, M2.5x25mm BHCS |
| 41076 | Screws, M2.5x12mm FHCS |
| 41083 | CR12 Tioga Body, Clear |
| 41084 | CR12 Tioga Roll Cage |
| 41085 | CR12 Tioga Wheels, Black |
| 5420 | FT Silicone Shock Fluid, 10wt (100 cSt) |
| 5421 | FT Silicone Shock Fluid, 20wt (200 cSt) |
| 5422 | FT Silicone Shock Fluid, 30wt (350 cSt) |
| 5423 | FT Silicone Shock Fluid, 40wt (500 cSt) |
| 5424 | FT Silicone Shock Fluid 22.5wt (238 cSt) |

| Part # | Description |
|---|---|
| 5425 | FT Silicone Shock Fluid, 80wt (1000 cSt) |
| 5426 | FT Silicone Shock Fluid 27.5wt (313 cSt) |
| 5427 | FT Silicone Shock Fluid, 15wt (150 cSt) |
| 5428 | FT Silicone Shock Fluid, 25wt (275 cSt) |
| 5429 | FT Silicone Shock Fluid, 35wt (425 cSt) |
| 5430 | FT Silicone Shock Fluid, 45wt (575 cSt) |
| 5431 | FT Silicone Shock Fluid, 55wt (725 cSt) |
| 5432 | FT Silicone Shock Fluid 32.5wt (388 cSt) |
| 5433 | FT Silicone Shock Fluid, 37.5wt (463 cSt) |
| 5434 | FT Silicone Shock Fluid 42.5wt (538 cSt) |
| 5435 | FT Silicone Shock Fluid, 50wt (640 cSt) |
| 5436 | FT Silicone Shock Fluid, 60wt (800 cSt) |
| 5437 | FT Silicone Shock Fluid, 70wt (900 cSt) |
| 5438 | FT Silicone Shock Fluid 47.5wt (613 cSt) |
| 6332 | Body Clips |
| 6588 | Black Grease, 4cc |
| 6727 | Servo Tape |
| 6950 | Allen Wrench Set, 5 wrenches |
| 7186 | Screws, M2x6 mm SHCS |
| 89215 | Locknuts, Shock Piston |
| 91158 | Screws, M3x4 mm BHCS |
| 91560 | FT Bearings, 5x10x4 mm |
| 91563 | FT Bearings, 10x15x4 mm |
| 91581 | FT Ti Screws, M3x8 mm BHCS |
| 91587 | FT Ti Screws, M3x20 mm BHCS |
| 91591 | FT Ti Screws, M3x6 mm FHCS |

## :: Notes

TEAM ASSOCIATED

WORLD CHAMPION R/C CARS

**Associated Electrics, Inc.**
**26021 Commercentre Dr. Lake Forest, CA 92630 USA**

**call: (949) 544-7500 - fax: (949) 544-7501**

**Check out the following web sites for all of our kits, current products, new releases, setup help, tips, and racing info!**
**www.AssociatedElectrics.com**

FOLLOW US ON SOCIAL MEDIA

TeamAssociated
ReedyPower

@TeamAssociatedRC
@ReedyPower

@Team_Associated
@ReedyPower

AEFactoryTeam