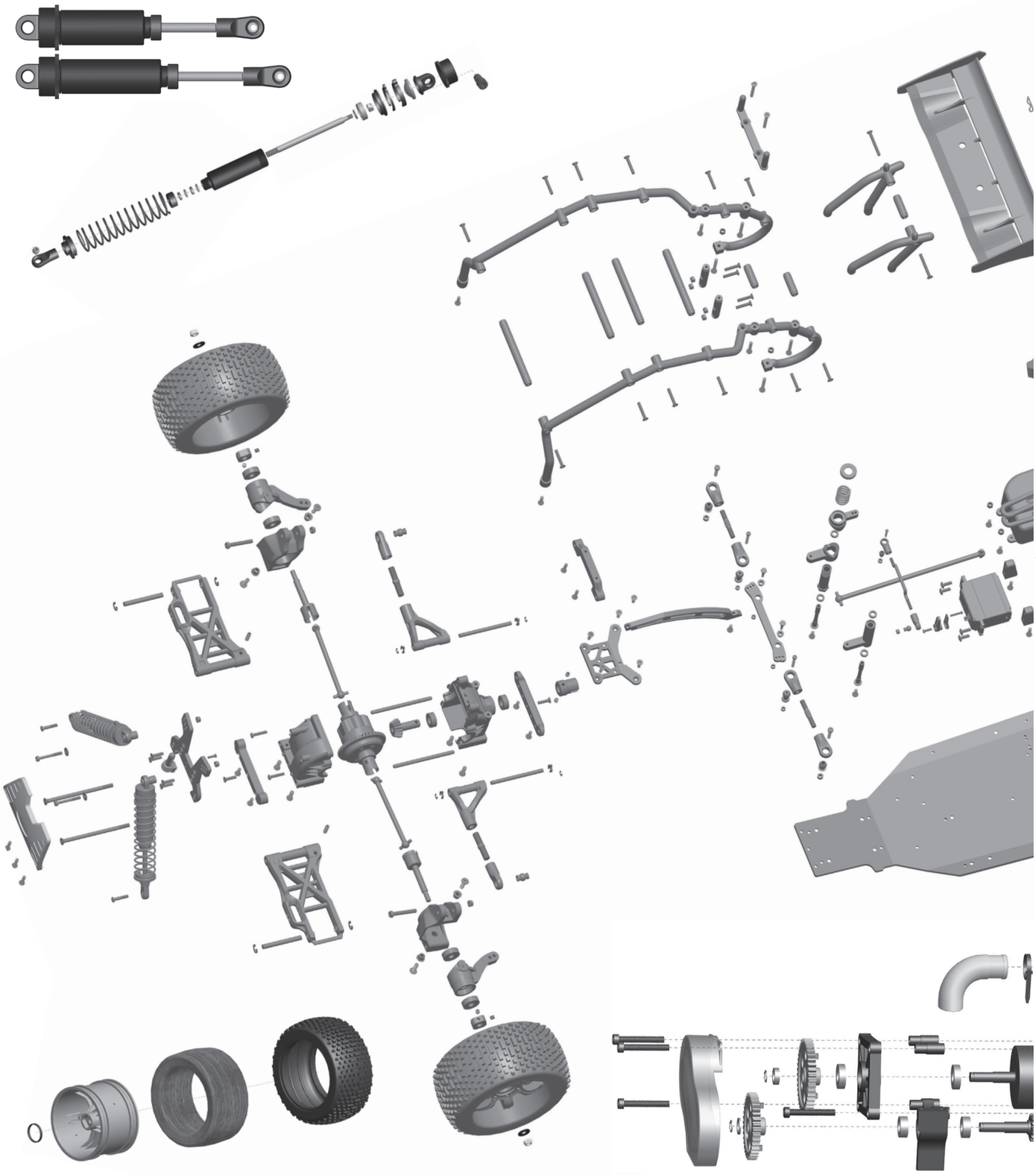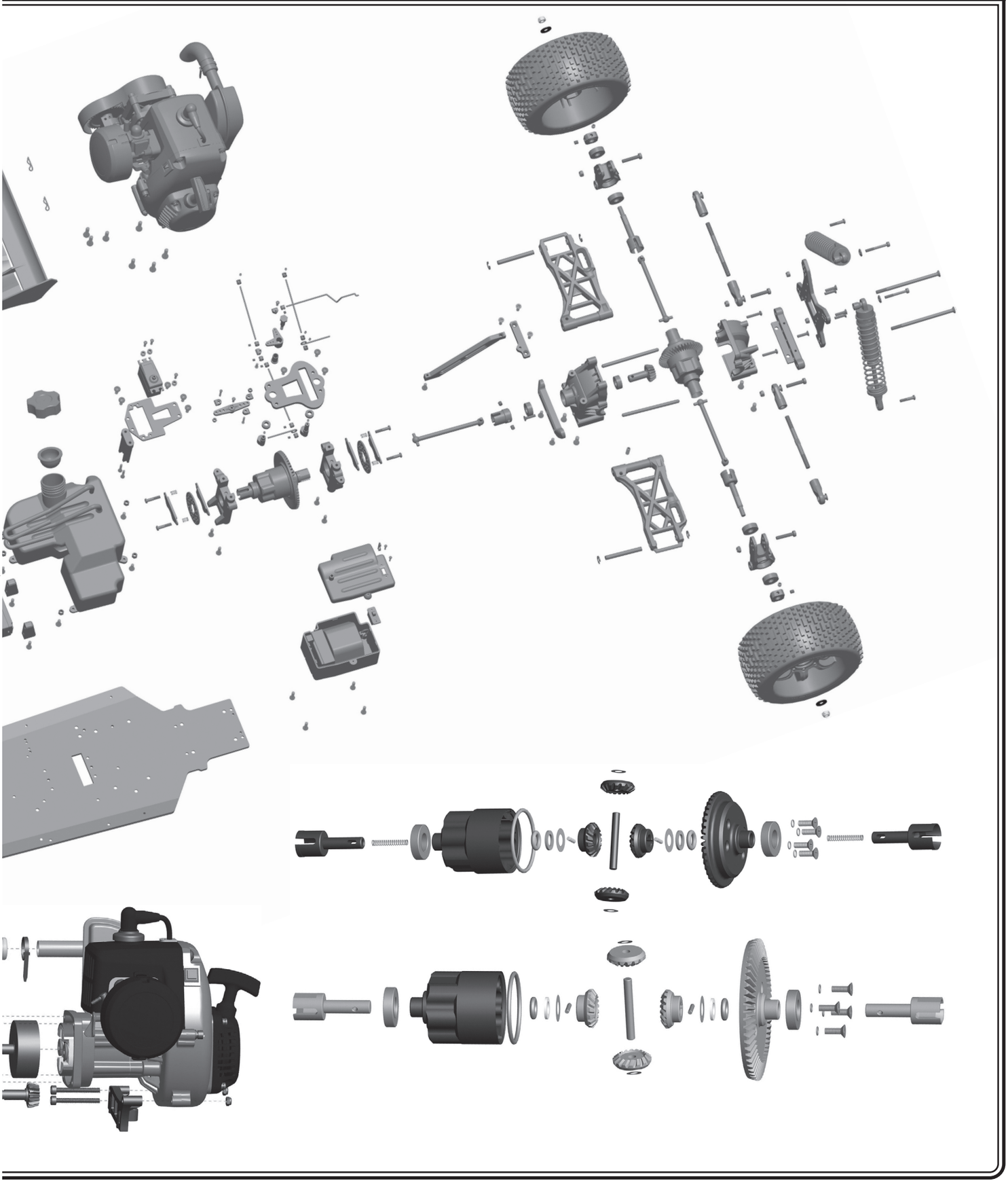FTX PUNISHER Exploded Parts Diagram