RC8B Factory Team

:: Driver: Chris Jarosz :: Date: 11/22/09

:: Track: Revelation Raceway - Montclair, CA

:: Event: Kyosho Fall Classic

Setup Sheet for Team Associated's RC8B

RESET FIELDS

Rev. 1

:: Front Suspension

anti-roll bar:
- ☐ 2.2 - black
- ☒ 2.5 - silver
- ☐ 2.8 - gold

bump - steer washers: 1 out

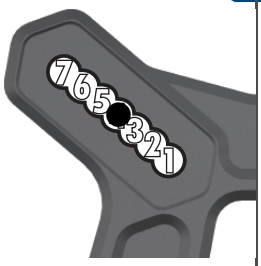

upper hinge pin bushing
front # 2 rear # 1
☒ up ☐ down ☐ up ☐ down

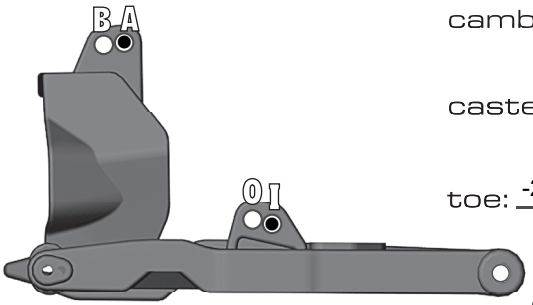

camber: -2 °

caster: 16 °

toe: -2 °

kickup bushing
2
☒ up ☐ down

ride height: 29 mm

:: Rear Suspension

anti-roll bar:
- ☐ 2.2 - black
- ☒ 2.5 - silver
- ☐ 2.8 - gold

wheelbase:
- ☐ long
- ☒ medium
- ☐ short

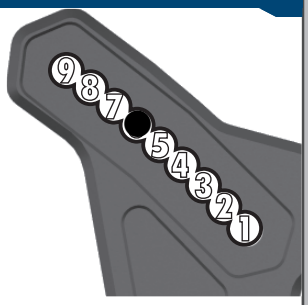

camber: -2 °

toe bushing d-plate:
1
☐ in ☐ out

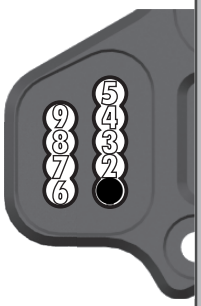

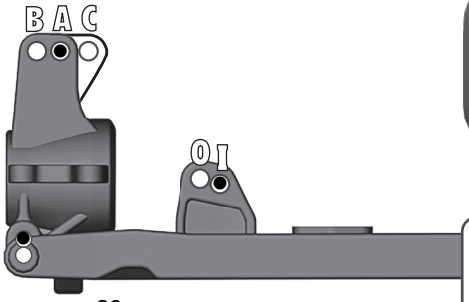

hub:
upper
lower

squat bushing c-plate:
2
☐ up ☒ down

ride height: 29 mm

:: Front Shocks

spring: Silver
piston: 10 x 1.1 Tapered
shock fluid: 25 wt
length: 108 mm
shock cap: Stock
rebound: 3 mm

:: Rear Shocks

spring: Black
piston: 10 x 1.1 Tapered
shock fluid: 25 wt
length: 125 mm
shock cap: Stock
rebound: 5 mm

:: Chassis Braces / Wheel Hex

chassis braces:
☐ pivot ☒ molded ☐ aluminum

wheel hex:
☒ standard ☐ narrow

:: Steering Blocks

steering blocks:
- ☐ standard
- ☒ cnc FT knuckles

:: Rear Hubs

rear hubs:
- ☐ standard
- ☒ cnc FT hubs

:: Differentials

front fluid: 5000
center fluid: 5000
rear fluid: 5000

:: Wing

location: ☒ forward ☐ back
angle: ☒ low ☐ med. ☐ high
type: JConcepts
gap: 25 mm

:: Gearing/Clutch

gearing: 16 / 44
clutch shoes: 1 x 1.1, 2 x 1.0 All Aluminum Shoes
clutch spring: ☐ .9mm ☐ 1.0mm ☐ 1.1 mm

:: Engine

engine: Reedy 121 VR
restrictor: 6.5 mm
muffler: Thunder Tiger 2039
temp: 270
glow plug: RT4
fuel: Sidewinder 30% Prototype

:: Tires

tire (F/R): Proline Cut Holeshot / Proline Cut Holeshot
compound (F/R): M3 / M3
insert: Proline Evo
wheel: Associated 83mm
traction additive: N/A

:: Race and Vehicle Comments

qualify: _____ main: _____ finish: _____ tq: ☐

comments:

:: Track Info

smooth: ☐ bumpy: ☒ blue groove: ☐

traction: ☐ high ☒ med. ☐ low

soft dirt: ☐ grass: ☐ clay: ☐ wet: ☐

dusty: ☒ other:

:: For more setups, visit www.RC10.com and click on 'Setup Sheets'